Dimension:

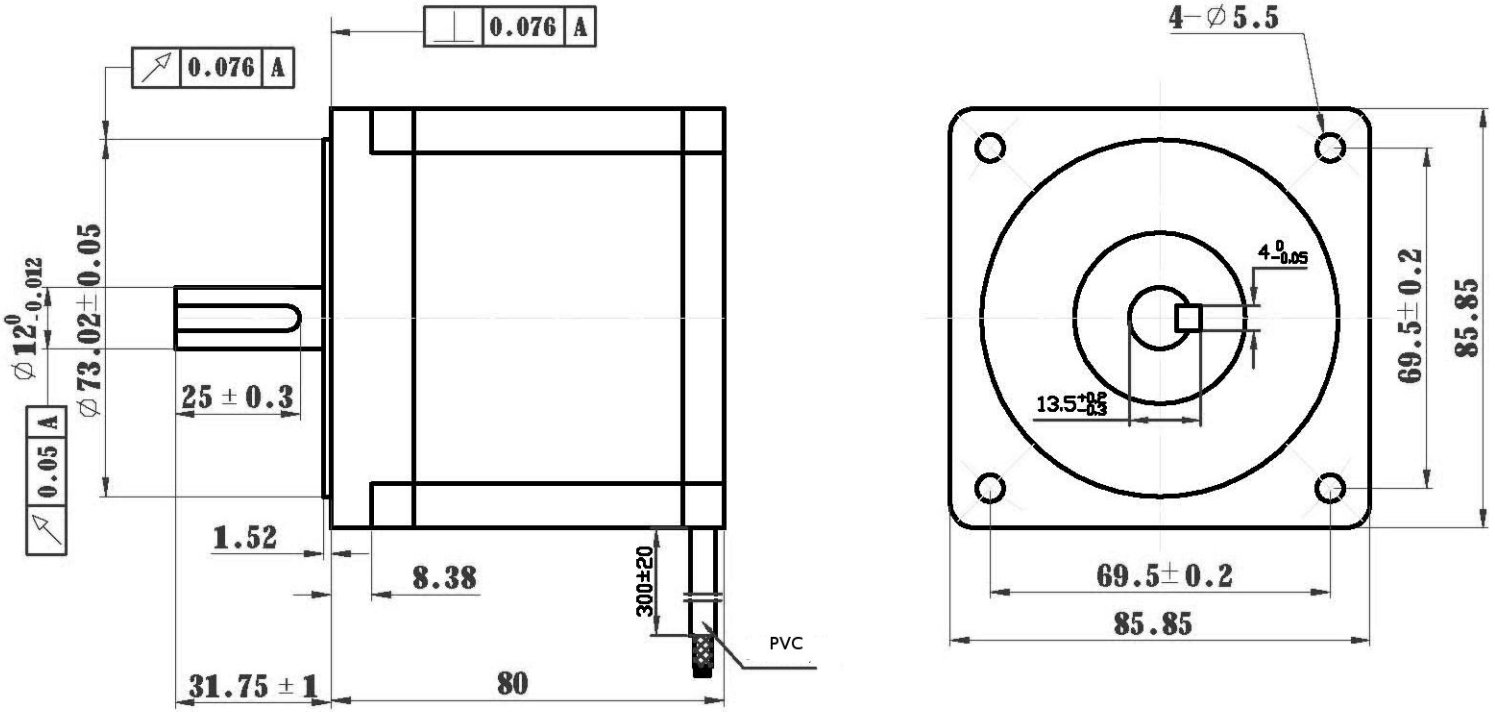

Wiring Diagram:

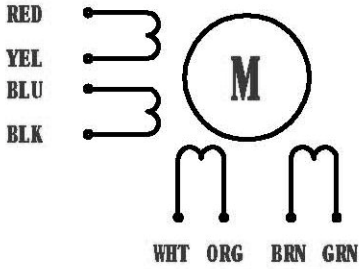

1430-AWG20# 400mm

Specifications:

PHASE	STEP ANGLE	CONNECTION STYLE	CURRENT	RESISTANCE	INDUCTANCE	HOLDING TORQUE	ROTOR INERTIA	WEIGHT
	DEG/STEP		A	ohms	mH	N.m	gcm^2	Kg
4	1.8	parallel	6	0.4	3.5	4.5	1400	2.3
		series	3	1.6	14			
		unipolar	4.2	0.8	3.5	3.3		

REV	ECN NO.	DESCRIPTION	DRN	APP'D	DATE

UNLESS OTHERWISE SPECIFIED
TOLERANCES:
DECIMALS: .x ±0.5, .xx ±0.25, .xxx ±0.1
ANGULAR: ±0°30'
UNIT: mm
DO NOT SCALE DRAWING

MATERIAL

THIRD ANGLE PROJECTION

DESIGN | DATE | CHECK | APP'D | SCALE | SHEET OF

P/N.

TITLE SPECIFICATIONS

USED ON M86HS45

DWG NO. FX3.162. SS

REV

SOPROLEC