Rated voltage (VDC)	24
Working voltage (VDC)	24-48
Rated power (W)	100
Rated torque (N.m)	0.32
Max torque (N.m)	0.96
Rated speed (rpm)	3000
Max speed (rpm)	4000
Rated current (A)	5.7
Max current (A)	17.7
Torque constant (N.m/A)	0.063
Back EMF constant (mV/rpm)	3.8
Inertia(kg*m^2*10^{-4})	0.072
Resistance(Ω)	0.55
Inductance(mH)	0.33
Motor poles	10
Encoder	17 bit
Max radial load (N)	78
Max axial load (N)	54
Protection level	IP65
Mass (kg)	0.59

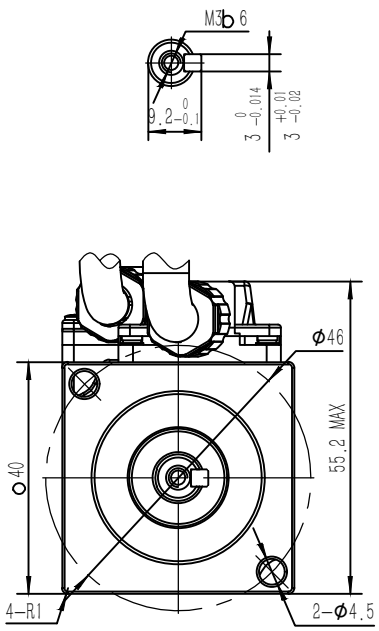

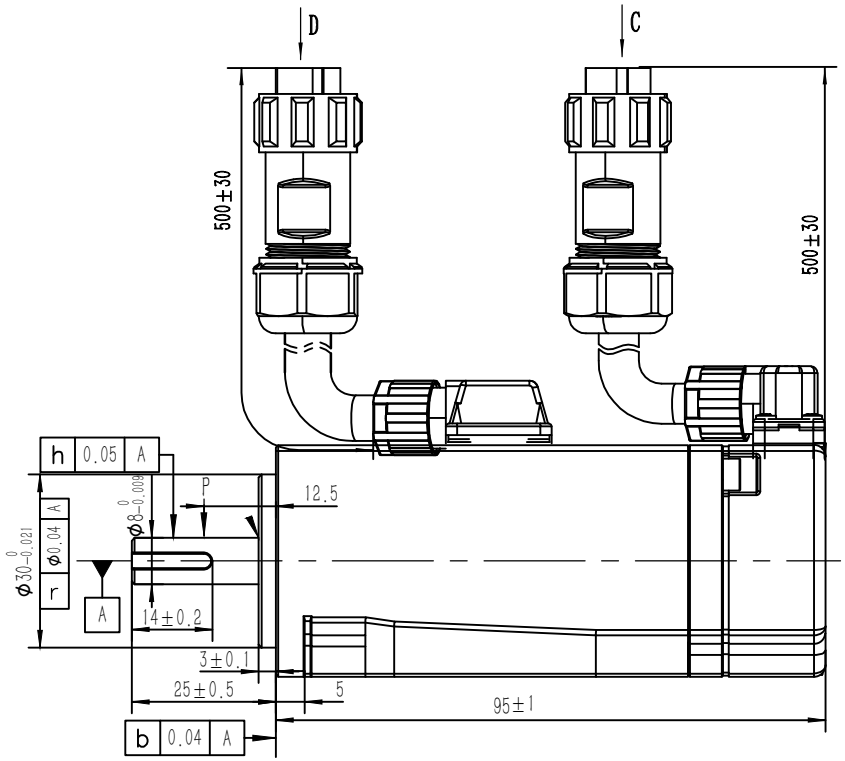

The curve of torque-speed

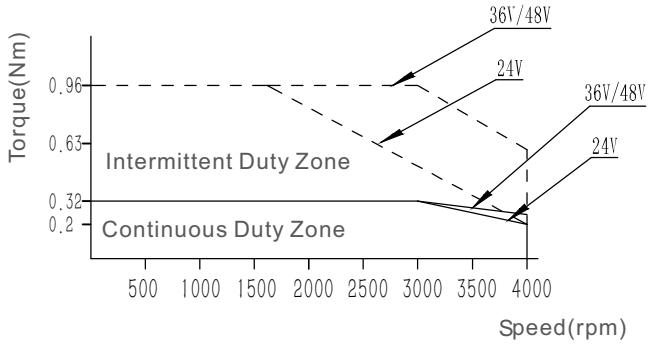

D

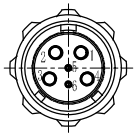

Type	Power connector					
Pin	1	2	3	4	5	6
Defi	U	V	W	PE	0V	24V
Color	Red	Blue	Black	Yellow/green	Black	Red

C

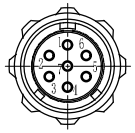

Type	Encoder connector						
Pin	1	2	3	4	5	6	7
Defi	GND	5V	0V	SD+	SD-	BAT+	BAT-
Color	PE	White	Black	Blue	Purple	Red	Yellow

China Leadshine Technology Co .Ltd

ELVM4010V48EH-M17-HD

100w servo motor with 17 bit absolute encoder

40mm frame size / 24 - 48V with brake