Kinco 步科

iWMC integrated servo wheel

User manual

Kinco Electric (shenzhen) Ltd.

en.kinco.cn

Preface

Thank you for using the servo products by kinco !

iWMC integrated servo wheel is a fully integrated design of the power module launched by kinco . The four modules of wheel, reducer, servo motor and drive are integrated, which can optimize the structure of the car, simplify the installation operation steps, shorten the installation time of the vehicle, and use dual power supply design for the drive, making the system more safe and reliable.iWMC integrated servo wheel is widely used in logistics storage equipment, mobile handling equipment, mobile service robots and other fields.

Please read the manual carefully and follow the operation requirements in the manual, which will help you correctly set up the servo wheel to achieve the best performance.

Confirmation

- Please confirm whether the product is damaged during transportation
- Please confirm whether the model is the same as the one you ordered according to the nameplate information of the product.
- Please confirm whether the accessories of the product are complete.

If there is any problem with any of the above, please contact Kinco or your supplier to solve it.

Safety attentions

Security Definition

The following safety symbols are used in the safety-related contents of this manual. Please observe them to avoid injury.

Danger

Wrong operation could lead death or serious injury.

Warning

Risk of minor injury or serious property damage.

Note

Information marked for attention helps ensure proper product operation.

Remind

Suggestion, reminding, or reference linking

Security Claims

- **Operating qualifications**

This product must be operated by trained professionals. In addition, the operator must go through professional skills training, familiar with the installation, wiring, operation and maintenance of the equipment, and correctly respond to various emergency situations in use.

- **Unpacking and Acceptance**

Note

- Before unpacking, first check whether the appearance of the package is normal and intact, without obvious scratches, extrusion deformation, damage, or be affected with damp. For safety reasons, do not use products with damaged packaging or parts.
- Please verify that the model number and quantity match the order information as per the order list inside the box and the nameplate information on the product.
- Please confirm whether all terminal accessories are complete and there are no defects or rust on the surface of the product.

- **Storage and Transportation**

Warning

- When handling, please handle with care. Do not stack the products too high to prevent product damage and personal injury caused by product fall.
- If the product is not used for a long time, it should be confirmed whether there is water or dew inside the product before use, otherwise there is the risk of burning the internal drive. Please carry out closer protection and necessary inspection.
- Please store the product in accordance with the specifications and avoid shock and vibration of the driver during transportation and storage, otherwise it will cause the risk of product damage.

Remind

- If the product is not intended to be used for a long time, it is recommended that the product be powered on every few months to prevent damage to internal components due to moisture. At the same time, the product should be more tightly protected storage and pre-use inspection.
- When the product needs to be transported over long distances, it is necessary to pack the product into a closed box before it can be transported.

- **Installation and operation**

Warning

- Do not stress the body of the servo wheel when installing/removing it, and ensure that each fixation is locked.
- The product should be installed in a place that is not easy to burn, to prevent the invasion of dust, corrosive gases, conductive objects, liquids and flammable substances, and to maintain good heat dissipation conditions.
- It is strictly forbidden to touch the shell and other parts to test the temperature during the operation of the product, otherwise there is the risk of burning.
- It is forbidden to modify the servo wheel without permission. If the damage is caused by unauthorized modification, the company will not be responsible for it!

Danger

- If the surface of the product is damaged or the parts are incomplete, do not install and operate, otherwise there is a risk of fire and injury.
- Foreign objects such as screws, metal gaskets, and metal rods falling into the drive pose a fire hazard and property damage.
- Wiring operations must be carried out by qualified personnel, otherwise there is a risk of electric shock.
- This product controls a potentially dangerous movement. Failure to comply with the regulations or perform operations in accordance with the requirements of this manual may result in personal injury, injury, and damage to the product and associated systems.
- Before powering on the device, ensure that the power supply meets requirements. Otherwise, the device may be damaged or a fire may occur.
- When energized, do not touch the product and terminal, do not disassemble the parts of the product, otherwise there is the risk of electric shock.
- Only professional personnel can replace the parts, it is strictly prohibited to leave the wire or metal in the machine, otherwise there is the risk of fire.

Remind

- Please use the cables specified by our company whenever possible when wiring. If the cable is not specified by the kinco, please purchase the specified wiring material or equivalent after confirming the rated current or use environment of the model used.
- Do not lay or bind encoder cables and signal cables in the same casing. Too close a distance will cause signal interference and cause motor misoperation.

Manual version revision records

Date	Update content
2025-9	All
2025-10	1.3 Supplement parameter information

Content

Preface 1
Confirmation 1
Safety attentions 1
Chapter 1 Product description 8
1.1 Naming rule 8
1.2 Nameplate information 8
1.3 Product specification parameter 9
Chapter 2 Installation and use requirements 10
2.1 Use requirements 10
2.1.1 Transport and storage conditions 10
2.1.2 Technical requirements 10
2.1.3 Operator requirements 10
2.2 Product installation 11
2.2.1 Product installation dimensions 11
2.2.2 Product installation and disassembly instructions 15
Chapter 3 Interface and wiring description 16
3.1 Part name 16
3.2 External wiring diagram 17
3.3 Cable terminal description 18
3.3.1 Cable and terminal specification 18
3.3.2 Terminal specification 19
3.4 Electrical wiring 19
3.5 EMC Configuration Description 20
Chapter 4 Kincoservo3 introduction 22
4.1 Basic Operation 22
4.1.1 Language Setting 22
4.1.2 Create /Save project 22
4.1.3 Init Save Reboot 23
4.1.4 Object Operation 23
4.2 Function information 24
4.3 Connection 24
4.4 Start KincoServo3 27
4.5 Trial operation 28
Chapter 5 Working mode introduction 29

5.1 Server Status 30
5.1.1 Server Status 30
5.1.2 Control word and status word description 31
5.2 Speed Mode (-3, 3) description 34
5.2.1 Related Function Settings 34
5.3 Torque mode (4) 37
5.3.1 Related function Settings 37
5.4 Position mode (1) 38
5.4.1 Related function settings 39
5.5 Homing mode (6) 40
5.6 Other application control functions 48
5.6.1 Limit function 48
5.6.2 Motor brake signal function introduction 51
5.6.3 Stop Mode Control 51
Chapter 6 Performance adjustment 53
6.1 Online auto-tuning 53
6.2 Manual tuning 54
6.2.1Speed loop setting method 54
6.2.2 Position loop setting method 59
6.3 Gain switch (Pro mode) 61
6.3.1 Gain switching method 62
6.4 Other factors affecting performance 63
Chapter 7 List of Common Object Parameters 64
Object list 64
7.1Mode and Control (0x6040) 66
7.2 Metrical data 67
7.3 Target object (0x607A) 67
7.4 Multi-segment position/Multi-segment speed (0x2020) 68
7.5 Performance object（0x6065） 69
7.6Homing control (0x6098) 70
7.7 Speed loop parameter (0x60F9) 70
7.8 Position loop parameter (0x60FB) 70
7.9 Input/output port parameter（0x2010） 71
7.10 Parameter for storage (0x2FF0) 74
7.11 Error code（0x2601） 74

7.12 Stop mode 74
7.13 Alarm parameter 75
Chapter 8 RS485 Communication 76
8.1 RS485 cable connection 76
8.2 RS485 communication parameters list 76
8.3 MODBUS RTU protocol 77
8.3.1 Modbus common function codes introduction 77
8.3.2 Modbus packet Example 78
8.4 RS232 communication protocol 80
8.4.1 RS232 transport protocol 80
8.4.2 RS232 data protocol 81
8.5 Troubleshooting Measures for Communication Faults 84
Chapter 9 CANopen Communication 85
9.1 CANopen communication protocol introduction 85
9.2 Hardware Description 85
9.3 Software Description 87
9.3.1 EDS description 87
9.3.2 SDO Description 87
9.3.3 PDO Description 91
9.4 CANopen Bus Communication Setting 97
9.5 Interpolation mode based on CANopen 99
Chapter 10 Alarm exclusion 101
10.1 Mistakes and historical errors 101
10.2 Alarm cause and treatment measures 103
Appendix I Method of configuring a third-party motor 107
Appendix II Commonly used formulas 108

Chapter 1 Product description

1.1 Naming rule

iWMC 104 09 - 022 22 - A 165 – M B D T - XXXX

Identification	Series name
iWMC	iWM: 4-in-1 servo wheel C: C series

Identification	Motor stator outer diameter
104	104mm

Identification	Reducer speed ratio
09	9 speed ratio
11	11speed ratio
15	15speed ratio
20	20speed ratio

Identification	Torque
022	22Nm
040	40Nm
054	54Nm
075	75Nm

Identification	Wheel speed
12	12*10rpm
17	17*10rpm
22	22*10rpm
23	23*10rpm

Identification	Special customization
XXXX	Custom suffix

Identification	Connector type
T	Standard connector

Identification	Supply voltage
D	DC48V

Identification	Brake
B	B:With brake
	A:Without brake

Identification	Encoder type
M	Single turn communication type magnetoelectric encoder

Identification	Wheel outer diameter
165	165mm
180	180mm

Identification	Wheel covering material/Pattern type
A	A:Polyurethane/Raised cross-section,diamond pattern

1.2 Nameplate information

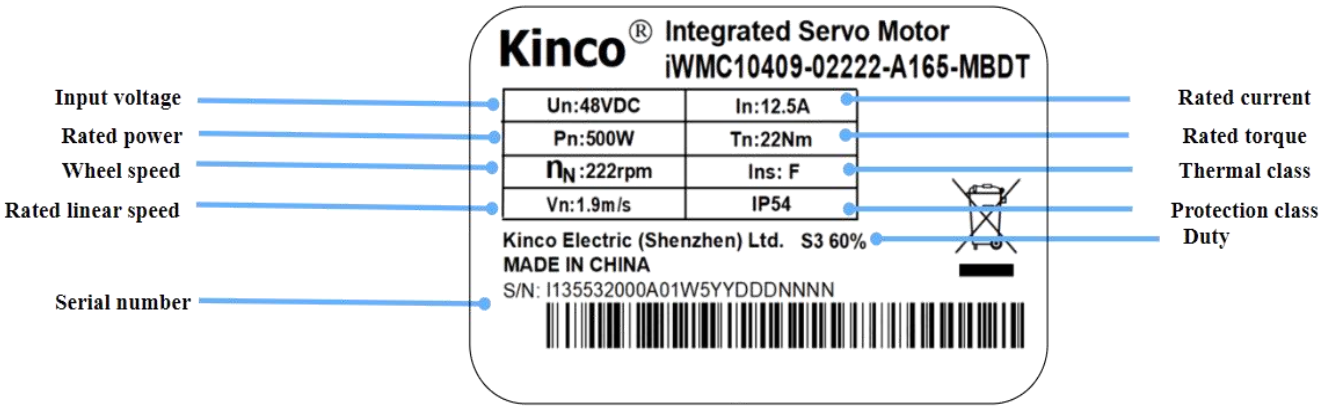

1.3 Product specification parameter

Table 1-1 Specification parameter table

Model parameter		iWMC10409-02222-A165-M■DT	iWMC10411-04023-A180-M■DT	iWMC10415-05417-A180-M■DT	iWMC10420-07512-A180-M■DT
Motor +Drive (Without reducer)	Power	Rated 48VDC(24VDC～60VDC)			
	Logic power	24VDC			
	Rated power Pn (W)	530	1050	1050	1050
	Rated torque Ts (Nm)	2.53	4	4	4
	Rated speed nN (rpm)	2000	2500	2500	2500
	Rated current In(A)	12.5	25	25	25
	Max current Im(A)	40	70	70	70
	Brake holding torque (Nm)	4	4	4	4
Complete machine	Reduction ratio	9	11	15	20
	Rated torque Ts (Nm)	22	40	54	75
	Rated speed nN (rpm)	222	227	167	125
	Max torque Tm(Nm)	66	99	150	200
	Max speed (rpm)	290	263	193	145
	Max radial force N	3000	7000	7000	7000
	Max axial force N	1000	1500	1500	1500
Wheel	Wheel diameter (mm)	165	180	180	180
	Wheel width (mm)	39.5	50	50	50
	Rubber wheel material	Polyurethane (anti-static)			
	Wheel hardness	85A±2	93A±2	93A±2	93A±2
Weight(Kg)		7.7	12	12	12
		8.2 (With brake)	12.5 (With brake)	12.5 (With brake)	12.5 (With brake)
Energy consumption brake		External brake resistance			
Energy consumption brake voltage absorption point		DC63±2V			
Overvoltage alarm voltage		DC68±2V			
Undervoltage alarm voltage		DC18±2V			
Cooling mode		Natural cooling			
Duty		S3，60%duty,10min	S3，40%duty,10min	S3,,40%duty,10min	S3,,40%duty,10min
General function	Input specification	2 channel DI , Common COMI terminal; High level :12.5V ~ 30VDC, Low level :0 ~ 5VDC; Maximum frequency :1 KHZ ， Input impedance: 5KΩ Min turn-on voltage < 11 v, Max cut-off voltage >5V ,Max input voltage : 30V			
	Input function	Freely defined as required, the functions are as follows: drive enable, drive error reset, drive mode control, speed loop proportional control, positive limit, negative limit, origin signal, command reverse, internal speed segment control, internal position segment control, emergency stop, start to find the origin, command activation, electronic gear ratio switching, gain switching			
	Output specification	1 channel digital output , open collector output, Max load current :100mA, Max control voltage : 30V			
	Output function	Freely defined according to needs, the functions are as follows: driver ready, driver error, motor position to, motor zero speed, motor lock brake, motor speed to, index Z signal appears, maximum limit speed in torque mode, motor lock shaft, motor limit medium, origin finding			
	Protect function	Overvoltage protection, undervoltage protection, motor overheat (I^2T) protection, short circuit protection, drive overheat protection			
Bus function	Modbus/RS485	It supports a maximum 115.2Kbps baud rate and can communicate with the controller using the Modbus RTU			
	CANopen	It supports a maximum 1Mbps baud rate and can communicate with the controller using the CANopen			
Environment	Working temperature	0℃～40℃			
	Storage temperature	-20～65℃ Short-term storage (Within one month) -10～55℃ long term storage (More than 1 month)			
	Humidity	Less than 90%RH (no condensation)			
	Protection class	III			
	Overvoltage class	I			
	Pollution class	2			
	Insulation class	F			
	International Protection	IP54 except for the connector of wire			
	Atmosphere pressure	67kpa～106kpa			
	Altitude	Less than 3000m,power derating 1.5%/100m between 1000m and 3000m			
Certification		Complies with EN 61800-5-1			

注 1： ■ = A : Without break
B: With break

Chapter 2 Installation and use requirements

2.1 Use requirements

- Ensure that this document is available to design engineers, installers, and personnel responsible for commissioning machines or systems that use the product.
- Please ensure that you always follow the requirements of this document and also consider the documentation for other components and modules.
- Please consider the legal requirements applicable to your destination and:
  - Regulations and standards
  - Test organization and insurance company regulations
  - National specifications

2.1.1 Transport and storage conditions

- Please ensure that the product is not subjected to more than permitted burdens during transportation and storage, including:
  - Mechanical load
  - The temperature is not allowed
  - Moisture
  - Corrosive gas
- Please store and transport in original packaging, which provides adequate protection against routine problems.

2.1.2 Technical requirements

The general conditions for the correct and safe use of the product must always be observed:

- The connection and environmental conditions specified in the product technical data and the technical requirements of all other connected components. Products are only allowed to operatein accordance with relevant safety procedures if they meet product specifications.
- Follow the instructions and warnings in this document.

2.1.3 Operator requirements

This product should only be operated by an electrical engineer who is familiar with the following provisions:

- Installation and operation of electrical control systems
- Applicable regulations for the operation of safe engineering systems
- Applicable provisions for accident protection and occupational safety
- Familiarize yourself with the documentation of the product

2.2 Product installation

2.2.1 Product installation dimensions

iWMC10409-02222-A165-M■DT

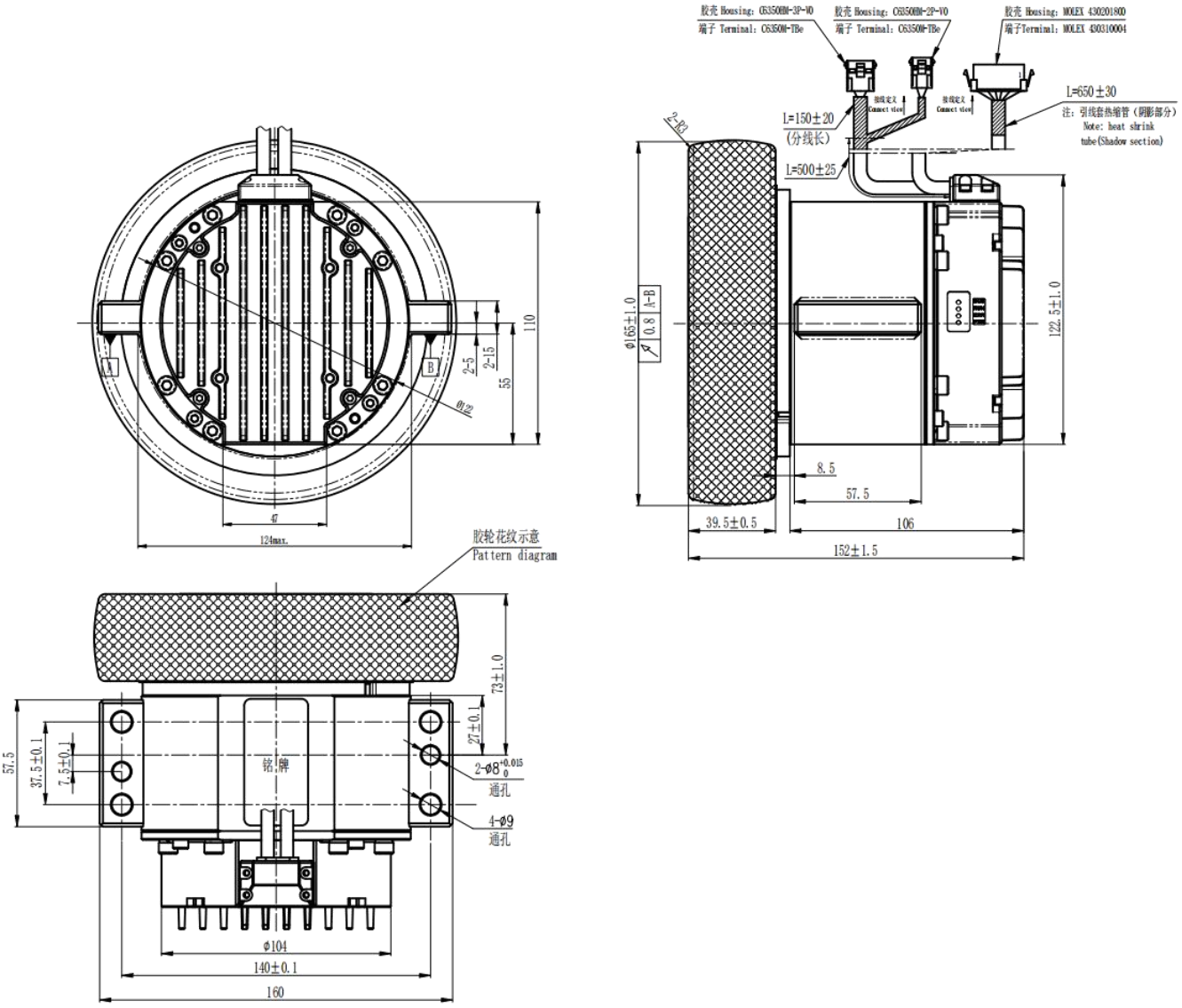

iWMC10411-04023-A180-M■DT

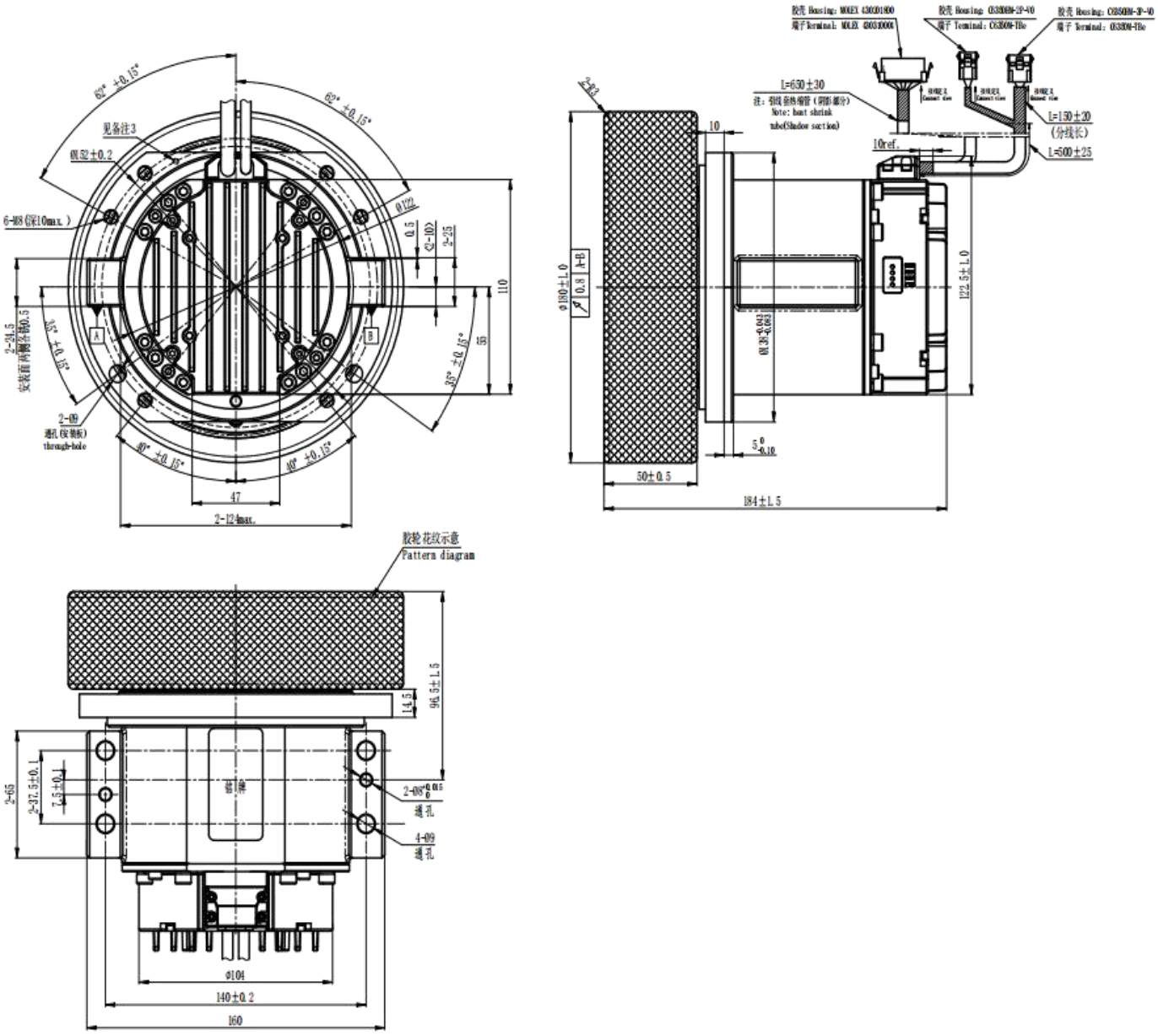

iWMC10415-06017-A180-M■DT

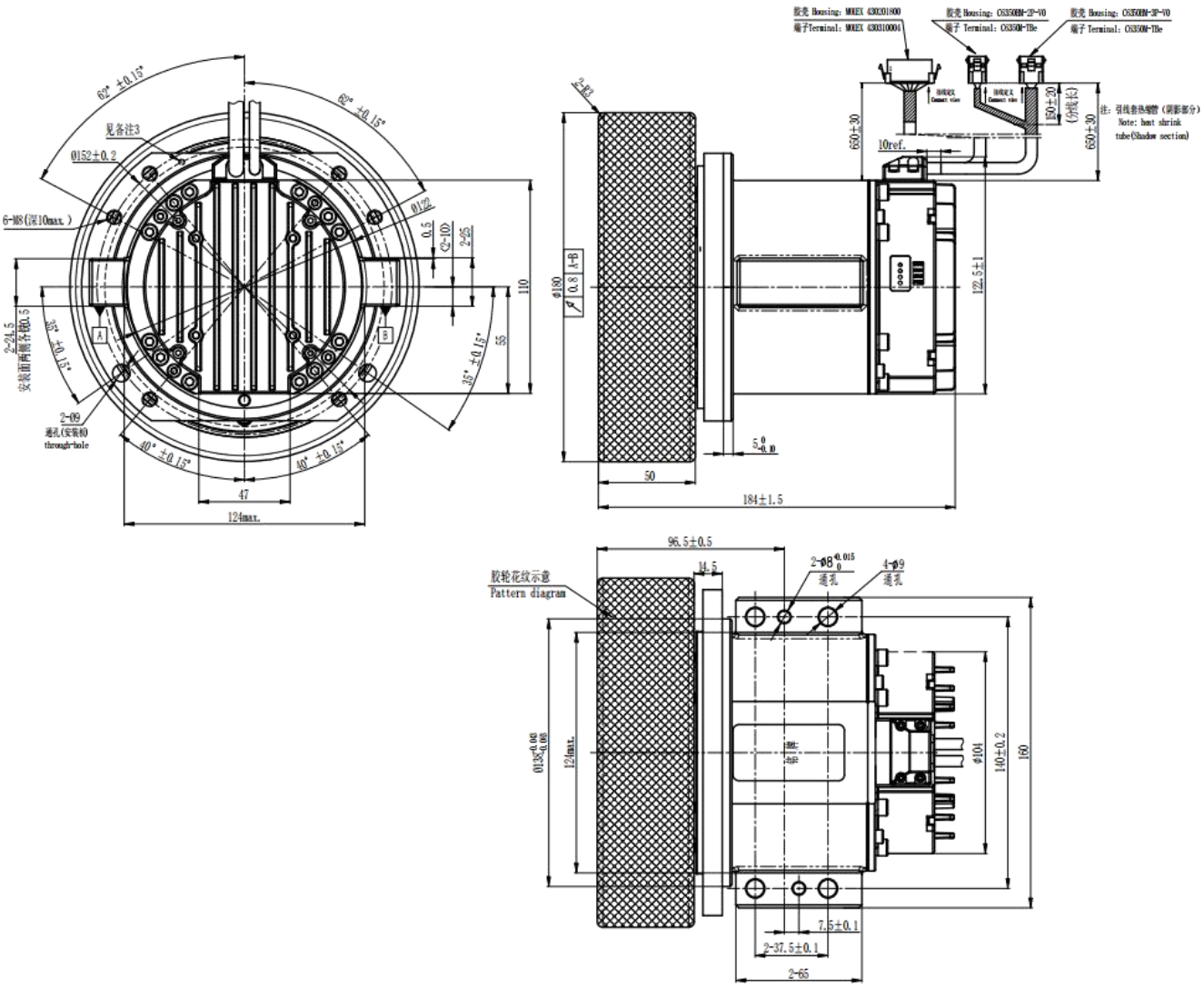

iWMC10420-07512-A180-M■DT-AS

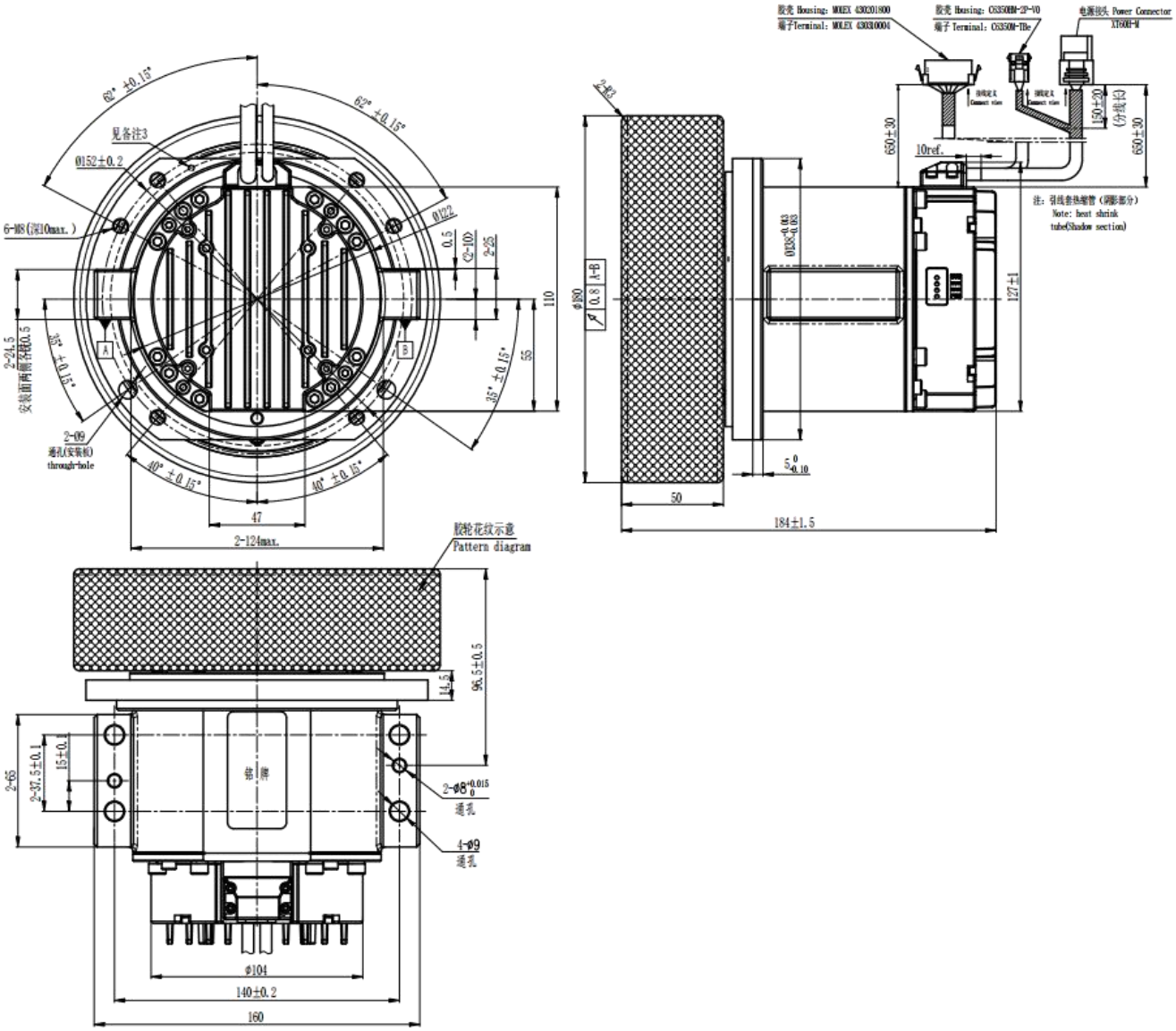

2.2.2 Product installation and disassembly instructions

Servo wheel rubber wheel replacement disassembly instruction	
600kg	1T
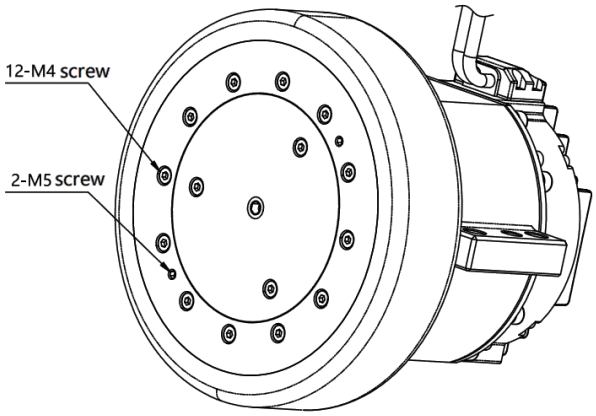 1.Remove the lock screw 12-M4 of the rubber wheel successively, and drag the rubber wheel in parallel to remove it. 2.If the rubber wheel is difficult to pull out manually, you can twist in the 2-M5 screw at the same time, and the rubber wheel will withdraw with the screw forward.	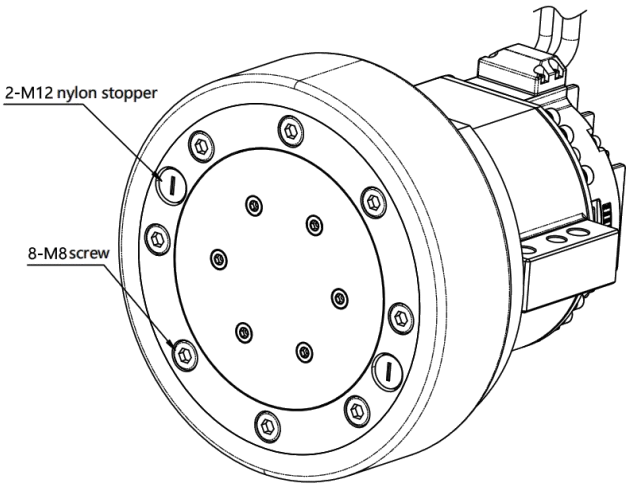 1. Remove the lock screw 8-M8 of the rubber wheel successively, and drag the rubber wheel in parallel to remove it. 2. When removing the rubber wheel, if it is difficult to pull it out manually, you can unscrew the 2-M12 nylon stopper, use the 2-M8 screw to screw into the matching threaded hole inside the nylon stopper , and synchronously rotate to push out the rubber wheel

Servo wheel installation instruction	
Installation method 1(Suitable for 600kg and 1T servo wheel)	Installation method 2(Suitable for 1T servo wheel)
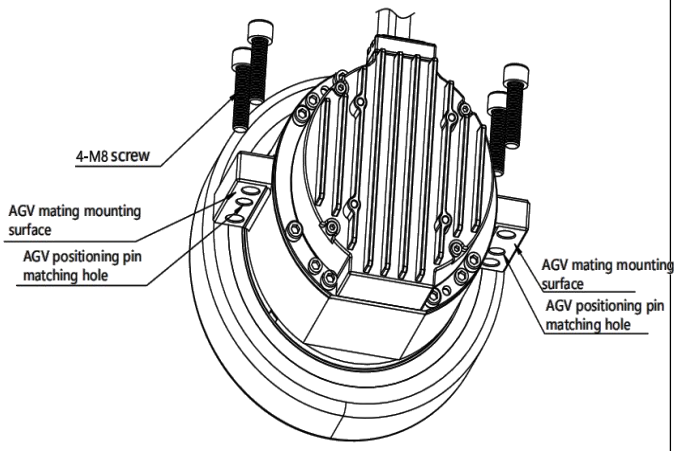 1.When the motor is installed, the pin hole at the side ear should be aligned with the positioning pin of the AGV frame. 2. After the motor positioning pin is aligned, the 4-M8 screws can be locked in turn	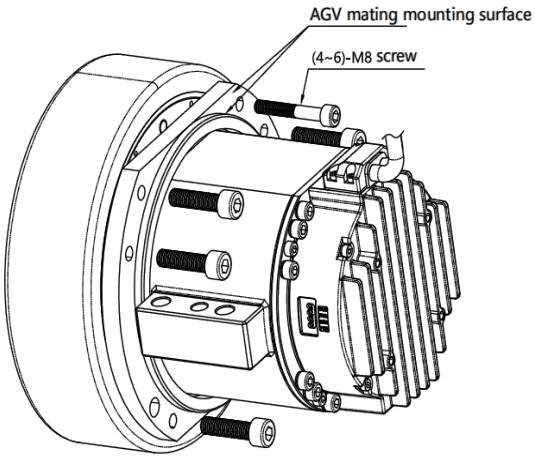 1.When the motor is installed, the pin hole at the side ear should be aligned with the positioning pin of the AGV frame. 2. After the motor positioning pin is aligned, the(4~6) -M8 screws can be locked in turn

Chapter 3 Interface and wiring description

3.1 Part name

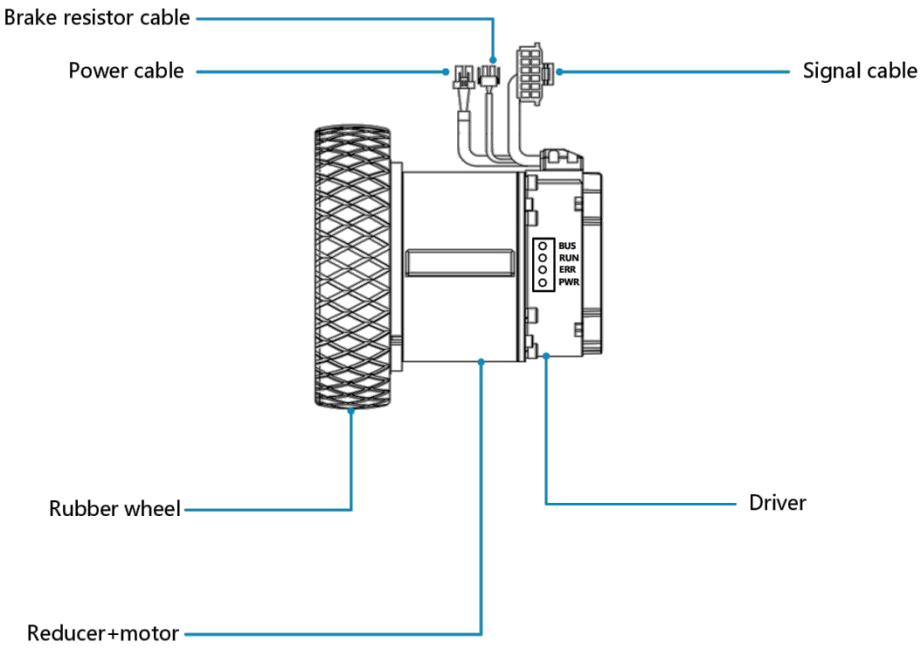

Figure 3-1 iWMC part name

Table 3-1 Indicator light description

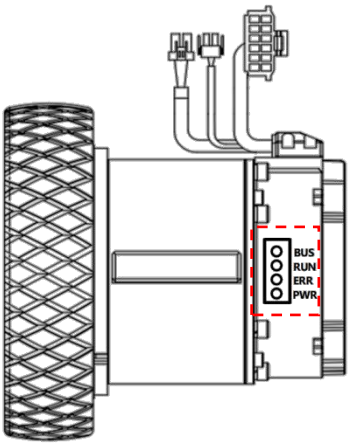	BUS (green)	When packets are transmitted on the bus, the blinking frequency is related to the packet transmission speed
	RUN (green)	The drive is always bright when it is in the ready state and is associated with the OUT3 port
	ERR (red)	The drive is always bright when it is in the error state, which is associated with the OUT4 port
	PWR (green)	The drive is powered on and the POWER indicator is steady on

3.2 External wiring diagram

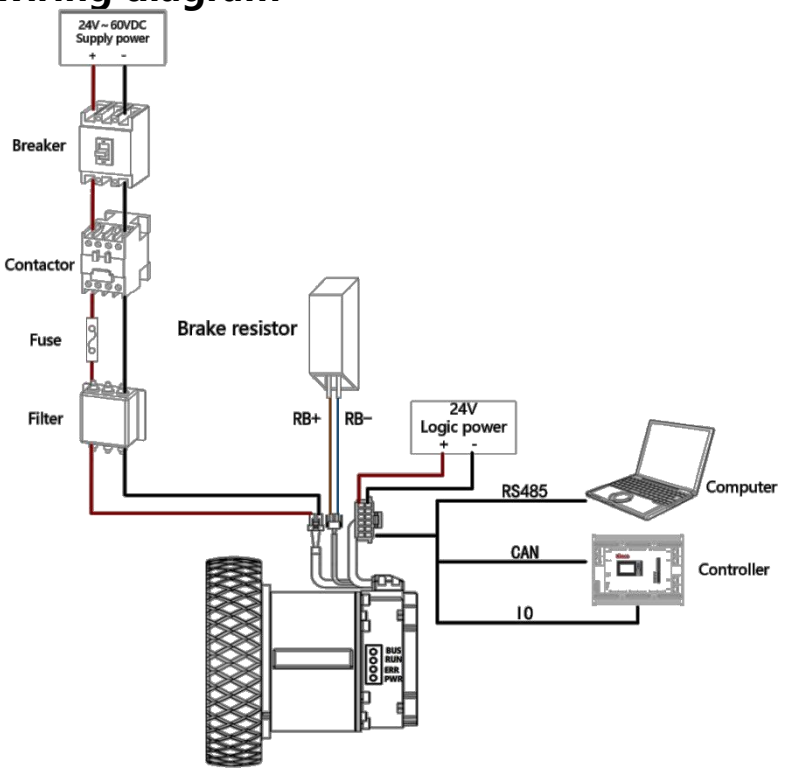

Figure 3-2 iWMC external connection method

Table 3-2 Recommended fuse model

Model	Recommended fuse	
	Model specification	Manufacture factory
iWMC10409-02222-A165-MADT/MBDT	ANL35A80VDCM8	Vicfuse
iWMC10411-04023-A180-MADT/MBDT	ANL60A80VDCM8	
iWMC10415-05417-A180-MADT/MBDT	ANL60A80VDCM8	
iWMC10420-07512-A180-MADT/MBDT	ANL60A80VDCM8	

Table 3-3 Recommended brake resistor model

Model	Brake resistance model	Minimum resistance of brake resistance [Ω]	Brake resistance power [W]	Brake resistance voltage [VDC] (minimum value)
iWMC10409-02222-A165-MADT/MBDT	T-10R-100	10	100	500
iWMC10411-04023-A180-MADT/MBDT	T-5R-200	5	200	500
iWMC10415-05417-A180-MADT/MBDT	T-5R-200	5	200	500
iWMC10420-07512-A180-MADT/MBDT	T-5R-200	5	200	500

Table 3-4 Recommended circuit breaker model

Model	Recommended circuit breaker	
	Model specification	Manufacture factory
iWMC10409-02222-A165-MADT/MBDT	NXB-63 D20	CHNT ELECTRIC
iWMC10411-04023-A180-MADT/MBDT	NXB-63 D32	
iWMC10415-05417-A180-MADT/MBDT	NXB-63 D32	
iWMC10420-07512-A180-MADT/MBDT	NXB-63 D32	

Table 3-5 Recommended contactor model

Model	Recommended contactor	
	Model specification	Manufacture factory
iWMC10409-02222-A165-MADT/MBDT	NXC-18	CHNT ELECTRIC
iWMC10411-04023-A180-MADT/MBDT	NXC-25	
iWMC10415-05417-A180-MADT/MBDT	NXC-25	
iWMC10420-07512-A180-MADT/MBDT	NXC-25	

3.3 Cable terminal description

3.3.1 Cable and terminal specification

iWMC servo wheel leads two cables from the body: signal cable and feedback cable. User can make their own cable or contact Kinco to purchase an extension cable. The terminal definition for power cable and feedback cable are as follows.

1.Power cable

Table 3-6 Servo wheel power cable terminal definition (servo wheel end)

Power supply interface 1			
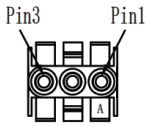	PIN	Cable color	Singal
	1	Red	DC+
	3	Black	DC-
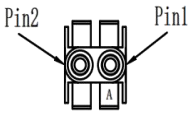	PIN	Cable color	Singal
	1	Brown	RB+
	2	Blue	RB-
Power supply interface 2			
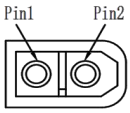	PIN	Cable color	Singal
	1	Red	DC+
	3	Black	DC-
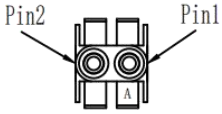	PIN	Cable color	Singal
	1	Brown	RB+
	2	Blue	RB-

Note: The power port can be selected according to the current demand

2.Feedback cable

Table 3-7 Feedback cable terminal definition (servo wheel end)

IO signal						
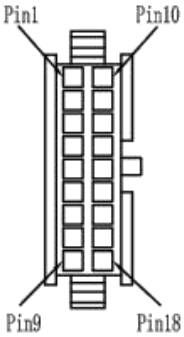	A			B		
	Pin	Name	Cable color	Pin	Name	Cable color
	1	24VS	Red	10	GNDS	Black
	2	LOCK+	Brown	11	LOCK -	Blue
	3	CANH	Light green	12	CANL	Light blue
	4	CANH	Pink	13	CANL	White and black
	5	RS485A	Gray	14	RS485B	White
	6	RS485A	Yellow	15	RS485B	Green
	7	DO1	Purple	16	COMO	Orange
	8	COMI	White and brown	17	DI1	White and red
	9	-	-	18	DI2	White and orange

Table 3-8 IO terminal detailed description

Pin	Name
24VS	Logical power input , must be connected, maximum input current: 1A
GNDS	Logic electrical reference ground

LOCK+	External release lock input (24V+) positive The input voltage is 24V, the maximum input current is 0.7A, only when the AGV body battery is out of emergency use; Only when both the logic power supply and the power supply are powered off, the external lock can be unlocked. Do not short-circuit or connect to other signals and enclosures during normal operation
LOCK-	External release lock input (24V-) negative The input voltage is 24V, the maximum input current is 0.7A, only when the AGV body battery is out of emergency use; Only when both the logic power supply and the power supply are powered off, the external lock can be unlocked. Do not short-circuit or connect to other signals and enclosures during normal operation
CANH	CAN signal positive end
CANL	CAN signal negative end
RS485A	RS485 data positive end
RS485B	RS485 data negative end
DO1	Digital signal output，DO1 for the open collector output，maximum output current : 100mA
COMO	Digital signal output common terminal
COMI	Digital signal input to the common end
DI1	Digital signal input，COMI terminal; High level: 12.5 ~ 30VDC Low level: 0 ~ 5VDC Input impedance: 5KΩ Maximum frequency: 1KHz
DI2	

3.3.2 Terminal specification

Table 3-9 Terminal specification

Cable		Servo wheel end		Extension cable end	
Power cable	Supply power cable	Power supply interface 1	Power supply interface 2	Power supply interface 1	Power supply interface 2
		Housing : C6350HM-3P-V0 Contact pin : C6350M-TBe	Connector：XT60H-M	Housing：C6350HF-3P-V0 Contact pin : C6350F-TBe	Connector：XT60H-F
	Brake resistance cable	Housing： C6350HM-2P-V0 Contact pin: C6350M-TBe		Housing：C6350HF-2P-V0 Contact pin : C6350F-TBe	
Signal cable		Housing：MOLEX 430201800 Contact pin：MOLEX 430310004		Housing：MOLEX 430251800 Contact pin：MOLEX 430300004	

3.4 Electrical wiring

Figure 3-3 shows the input and output electrical wiring of iWMC.When there is a lot of interference in field applications, twisted pair cables are recommended for control signals to reduce interference from interference sources to control signals.

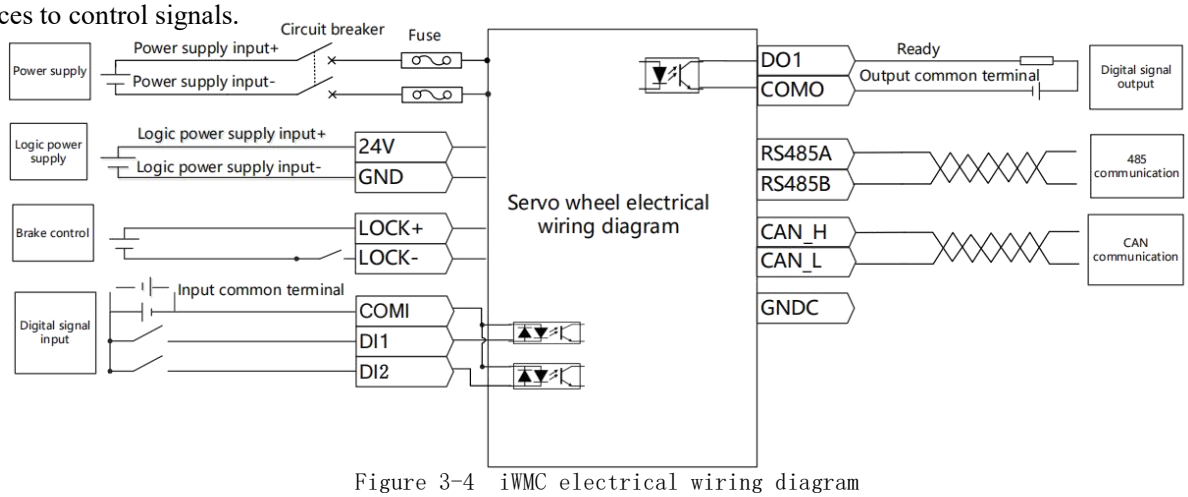

Figure 3-4 iWMC electrical wiring diagram

Note

- The iWMC is a device that accesses power to drive the internal motor lock. If external manual lock release is required, it should be noted that the iWMC cannot access the power supply and logic power supply. Manual forced lock release is only used in emergency situations.
- When the external lock of iWMC is released, the power supply voltage must be 24V. When the voltage exceeds 24V, the lock coil will be damaged in high temperature.The wiring diagram of the forced external release brake is as follows:

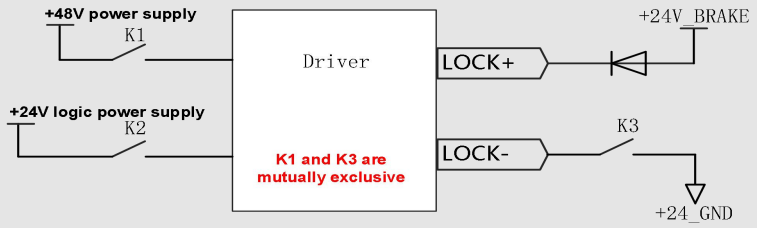

3.5 EMC Configuration Description

iWMC series servo drives meet the relevant requirements of EMC certification standards EN IEC 61000-6-2 , EN IEC 61800-3 , but in the course of product use, it may be affected by the actual installation method, connector and wiring status. Results in different EMC test levels.

Warning

- In the civil environment, this product may cause interference which may degrade the reception quality of radio signals. Users shall take suppression measures if necessary to prevent interference.
- Products must be installed and certified by professionals who are familiar with safety and EMC requirements, and EMC engineers are responsible for ensuring that the products and systems produced comply with relevant laws.

Site condition

iWMC devices are not directly connected to the mains and meet the requirements of OVC I and PD 2 use sites.

Installing environmental condition

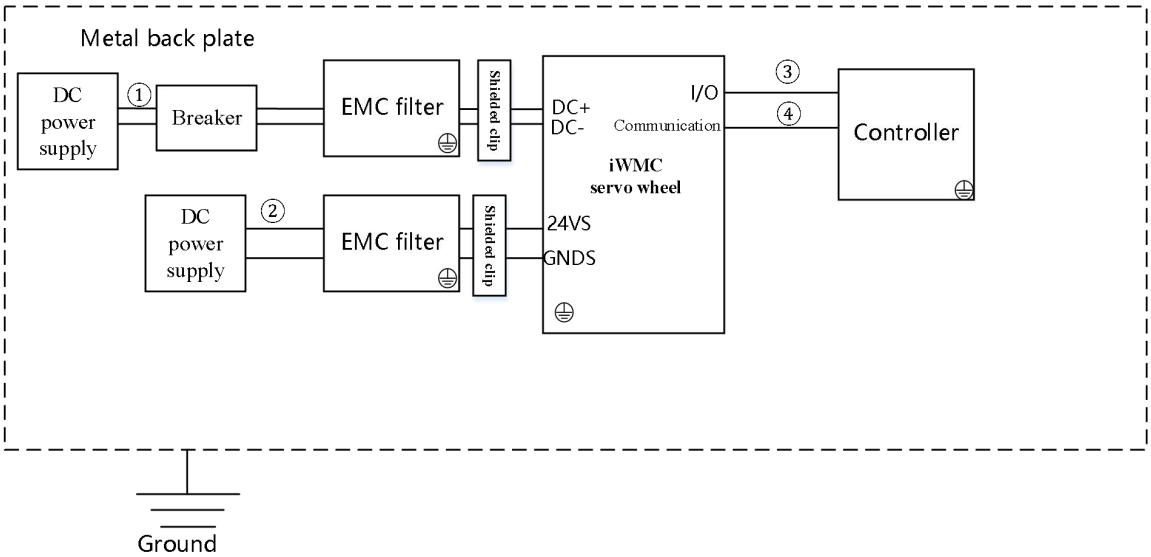

Figure 3-4 iWMC installation environment diagram

Note ：

1.Select the shielded cables in the diagram with a shielding coverage rate of more than 85%.

Serial number	Cable name	Specification
①	Power cable	Without shielded cable
②	Logic cable	Without shielded cable
③	Input/Output signal cable	Shielded cable
③	Communication cable	Shielded + twisted pair cable

2. Please install the device in the control cabinet. The device should be installed on the same metal backplane with good electrical conductivity in the cabinet.

(1) EMC noise filter

- In order to ensure that the product meets the EMC standard requirements, install the EMC noise filter at the power input near the servo wheel. The recommended noise filter model is as follows

Wheel	Model	Manufacture factory
iWMC10409-02222-A165-MADT/MBDT	QMN30S3L2（Power supply end) QML06W1（Logic power supply end)	QIMAI
iWMC10411-04023-A180-MADT/MBDT		

- The length of the cable between the output of the noise filter and the input power supply of the servo wheel should be less than 30cm;
- The servo wheel and filter are installed in the same metal backplane and the metal backplane is well grounded;
- Do not lay the input and output cables of the filter in the same slot or bind them together.

(2) Grounding

- In order to prevent electric shock, be sure to ground the noise filter, servo wheel;

(3) Shielded layer

- Input and output signal cables and communication cable please use shielded cable.

Chapter 4 Kincoservo3 introduction

Kincoservo3 is a new PC debugging software launched by Kinco after optimization and upgrading based on Kincoservo+. This chapter will briefly introduce how to use Kincoservo3.

Software download link: https://en.kinco.cn/download/servossoft.html

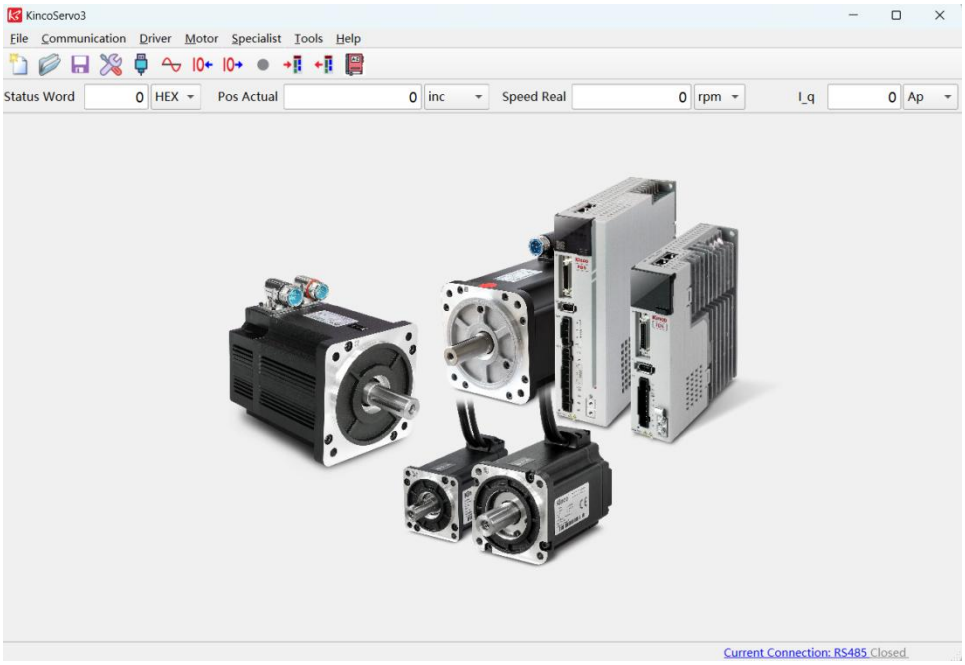

4.1 Basic Operation

4.1.1 Language Setting

The software interface language can be set to Chinese or English. Choose **Tools** → **Language** switch from the menu bar.

4.1.2 Create /Save project

A new project file can be created through the menu bar **File** → **New** or clicking the button.

A existing project file can be opened through the menu bar **File** → **Open** or clicking the button.

Save the current file as .kp file by using the menu bar **File** → **Save** or by clicking the button.

Note

- Only the windows (object list, scope etc.) are saved-parameters in the controller can't be saved in this way.

4.1.3 Init Save Reboot

The following window is displayed through the menu bar **Driver → Init Save Reboot** :

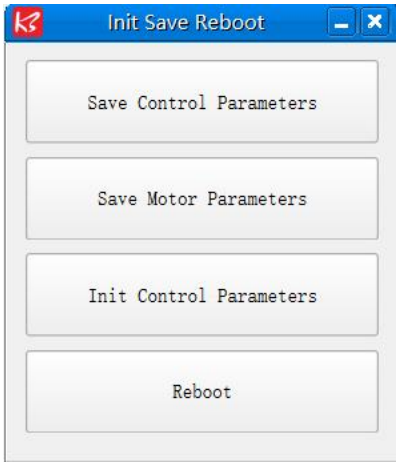

Note

- After completing the init control parameters, the Save Control Parameters and Reboot buttons must be clicked to load the default control parameters

4.1.4 Object Operation

In any window containing the object parameter list, select the object you want to operate and right-click, the following interface will be displayed:

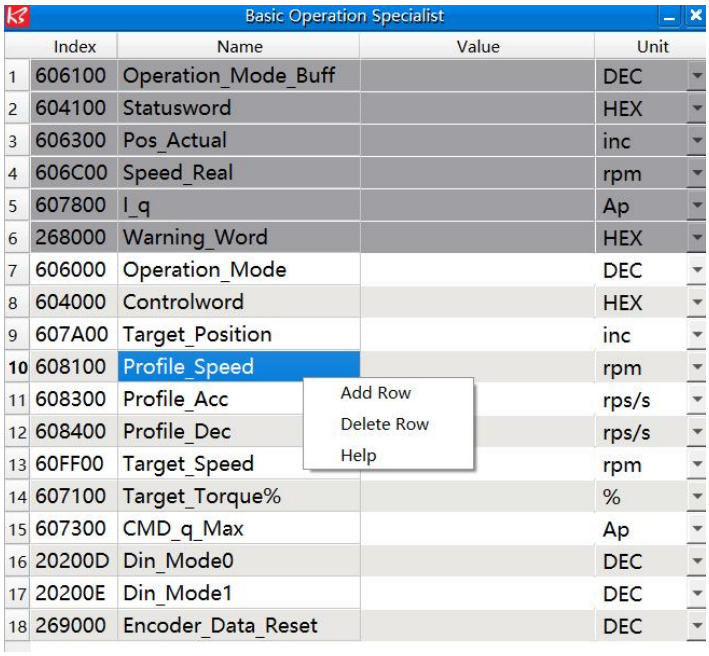

Add Row：At this time, the object dictionary will be displayed. Double-click to select the parameter to be added, and the object will be added to the parameter list.

Delete Row： The selected parameter is removed from the parameter list.

Help： You can see the description of this parameter in the object dictionary.

4.2 Function information

KincoServo3 has the following functions:

- **System monitoring:** monitor the running status of the servo drive, alarm, and detect and save the instantaneous data of the servo operation

  Specific functional modules include:

  - Oscilloscope function
  - Alarm display function
  - Status monitoring function

- **Parameter management:**
  - Read and download all parameters in the servo drive object dictionary
  - Read the previously saved parameter file
  - Modify the parameter
  - Send the parameter to the drive
  - Save the drive parameter to EEPROM
  - Restores factory parameter

- **Inertia recognition:** After a series of actions to identify the load inertia can be written to the driver through parameter management

- **Gain adjustment:**
  - The rigidity level and adjustment method of the servo can be adjusted. When adjusting to manual mode, each parameter can be modified
  - The rigidity level can be set. Its main function is to call the rigidity table. Different rigidity levels correspond to the corresponding PID parameters in the rigidity table, and no parameter can be modified

4.3 Connection

485 communication connection

- If user want to realize the communication between iWMC and PC, user need to purchase a 232/485 to USB isolation converter. The 485 communication connection method is as follows:

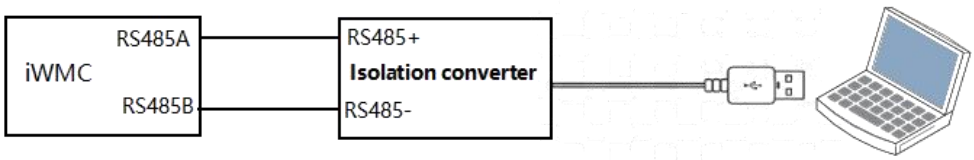

When using the software for connection debugging, note that:

- Select the RS485 port on the Setting . The default communication protocol of the 485 port on the iWMC is 232. Therefore, the host computer can be successfully connected without changing the communication protocol using the internal address.

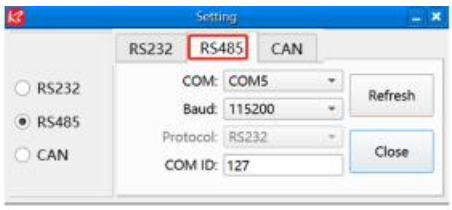

- If a sudden power failure causes communication interruption during firmware update using the RS485 port. The phenomenon displayed on the software is shown below. You need to power on the drive, click the download button to enable the serial port communication before updating the firmware again.

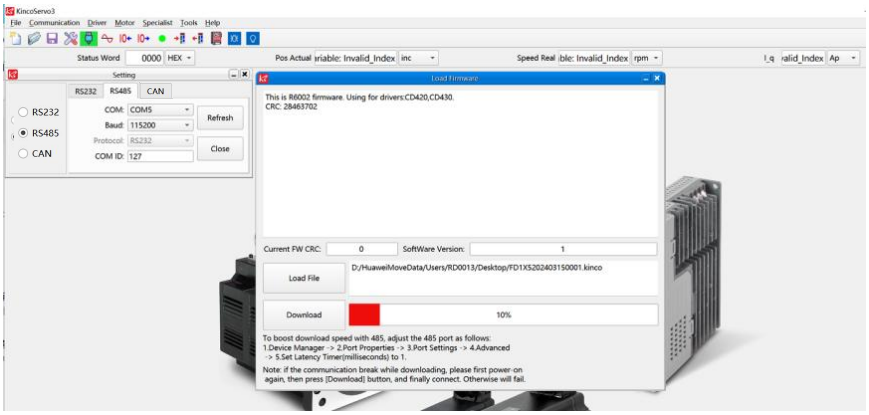

Relevant parameter：

Internal address	Parameter Name	Meaning	Default
100B0010	Equipment station number	Driver station number	1
2FE20010	RS485 baud rate	Set the baud rate of the RS485 port (Modbus address: 0X2600) Set value Baud rate 1080————9600 540————19200 270————38400 90————115200 Note: Need to save and restart.	270
65100C08	RS485 Communication protocol selection	bit0: 0: Using MODBUS protocol 1: using RS232 communication protocol bit1: 0: Changing bit0 takes effect immediately 1: Changing bit0 takes effect when the storage restarts	1
65100E10	RS485 mode	Data bit =8, stop bit =1, no parity check	Fixed value

Note

Do not move the PC interface when downloading the firmware. Otherwise, the download will fail.

CANopen communication connection

The iWMC can also communicate with the host computer through the CANopen protocol. Since one CAN bus can mount multiple devices, this function realizes the cascaded debugging of multiple servo wheels. The communication operation is as follows:

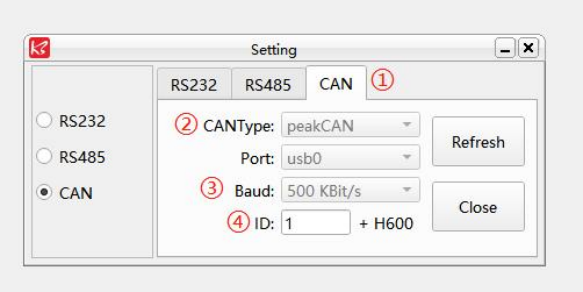

（1）Switch to the CAN interface on the Setting page

（2）Select the type of CAN device to be used. Currently, two kinds of CAN devices are supported to connect with the host software:

- **Peak CAN device** Recommended purchase link is as follows:

  a. 【Amazon】 https://www.amazon.com/CAN-Adapter-PCAN-USB-Isolation-GC-CAN-USB-ISO/dp/B078VQDR3G/ref=sr_1_1?crid=P0P8ZG4LDOON&dib=eyJ2IjoiMSJ9.cnsyJZ7VFjmrXpKz0K3pvKcQeaNNnduR0GI3wMWP0uy8_IHbeGgFXk73ql-yfhIZl6j92rVCgMlCm1I7n-IDLb82DHgcDiTg8w0I2-w_-5hxsv2pi7y1yyoOmf6NJ6_

- **ChuangxinCAN**

The connection between iSMK/FD1X5 driver and host computer to realize CAN communication are as follow:

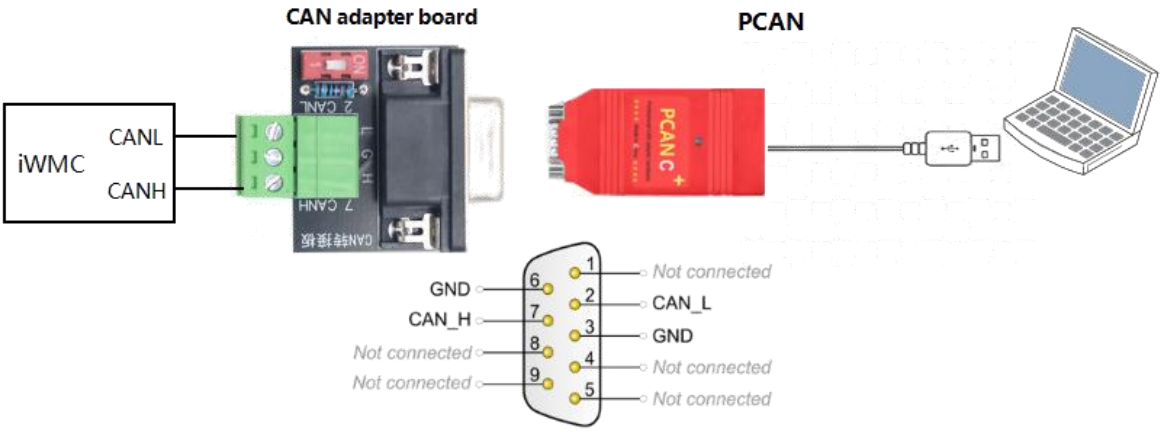

（3）Select the baud rate of CAN communication, the default is 500 KBit/s, and the object dictionary address is 【2F81 00】

（4）Select the device station number, the default is 1, the object dictionary address is 【100B 00】

After following the above steps, click the open button to connect the upper computer. Take the PeakCAN device as an example, the sign after successful connection of CAN communication is shown as follows:

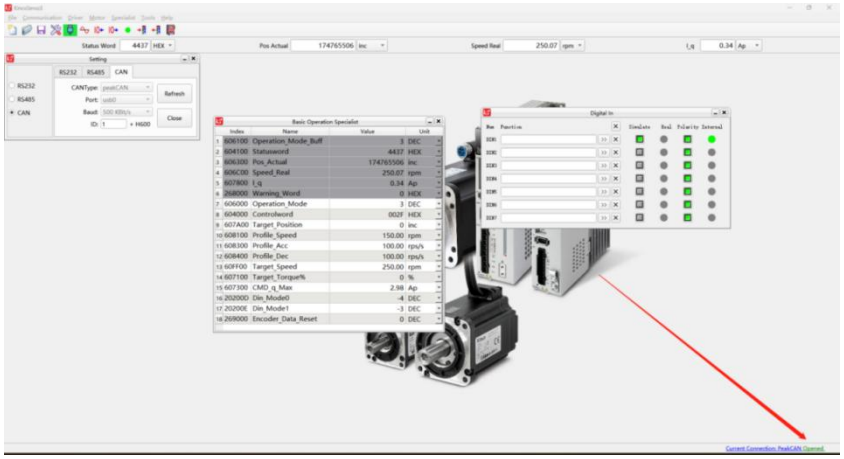

Note

The following are several situations that may cause the communication failure of the upper computer：

- CAN Type is not set correctly. Currently, only Peak CAN and Chuangxin CAN can be connected to the upper computer
- The baud rate and device station number are not set correctly
- The driver of CAN device is not compatible,here provide tested and verified PeakCAN and Chuangxin drivers, users can download from Baidu Netdisk.The operation is as follows: click **"Help"** → **"About"**, click "Driver" button in the pop-up interface will jump to the corresponding Baidu Netdisk interface
- The communication between KS3 and driver adopts CANopen protocol. Therefore, during the communication of the upper computer, do not use other devices (such as PLC or Linux devices) to send CAN messages (such as SDO/PDO messages) to the drive, otherwise the communication of the upper computer will be abnormal or even unable to communicate

4.4 Start KincoServo3

1、Start kincoservo3

- Double click to launch the software

2. Click Communication to open the Setting

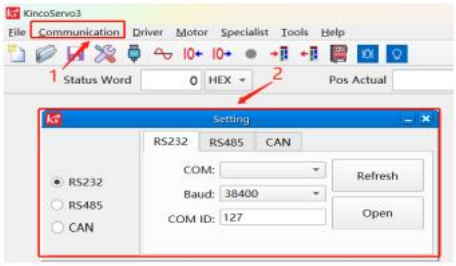

- Click Refresh, and select the serial port from the drop-down list.
- Select the baud rate set inside the drive. The default is 38400 for iWMC.
- Set the device station number of the drive. The default is usually 1 (127 is the universal ID).

Note

When the host computer and the driver are not connected, the following points should be noted:

- Determine the quality of the communication cable and check whether the communication connection is correct.
- Check whether the debugging cable is consistent with the serial port connected to the PC.
- Verify that the baud rate selected for communication is the value set internally by the drive.
- Determine whether the station number set for communication is the station number set inside the drive, you can use the universal ID=127 for connection.

4.5 Trial operation

The following table items need to be checked before running the servo wheel .

Table 4-1 Check list

Serial number	Wiring check items
1	The power input terminals (DC+, DC-) of the servo wheel must be properly connected
2	The control signal cables of the servo wheel are correctly connected, and the external signal cables such as lock and over-range protection are reliably connected
3	The servo wheel and servo motor must be reliably grounded
4	The stress on all cables is within the specified range
5	The distribution terminals have been insulated
Serial number	Environmental inspection items
1	There are no foreign objects such as wire heads and metal shavings inside and outside the servo wheel that will cause short circuit of signal lines and power lines
2	The servo wheel and external brake resistors are not placed on combustible objects
3	The installation, shaft and mechanical connection of the servo wheel must be reliable
4	The servo wheel and the connected machinery must be in operational condition

In order to verify whether the servo wheel can be used normally, the -3 mode can be used to confirm whether the servo wheel can rotate normally, and observe whether there is abnormal vibration and abnormal sound during rotation. It can be connected to the upper computer software for operation. Its operation steps are as follows:

- Wiring check:
  - Power input and motor output are correctly connected
  - 485 debugging cable is used to communicate with the servo wheel and the upper computer software KS3
- Check whether the POWER supply voltage is within the rated range. Power on the driver and observe whether the power indicator is steady on
- Configure the enable signal and set the working mode to -3. During the initial operation, it is recommended to rotate the motor at a low speed to confirm whether the motor is rotating correctly
- Observe the motor rotation direction is correct, if the motor steering is found to be opposite to the expected, please check the input command signal, command direction setting signal
- The running state can be monitored in the upper computer software, such as actual speed, actual current and other parameters
- After the above motor condition check is completed, the PID related parameters can be adjusted to make the motor work in the expected condition

Note

If a drive alarm occurs during the trial operation , refer to **Chapter 10** for error troubleshooting

Chapter 5 Working mode introduction

The servo system consists of three main parts: servo drive, servo motor and encoder.

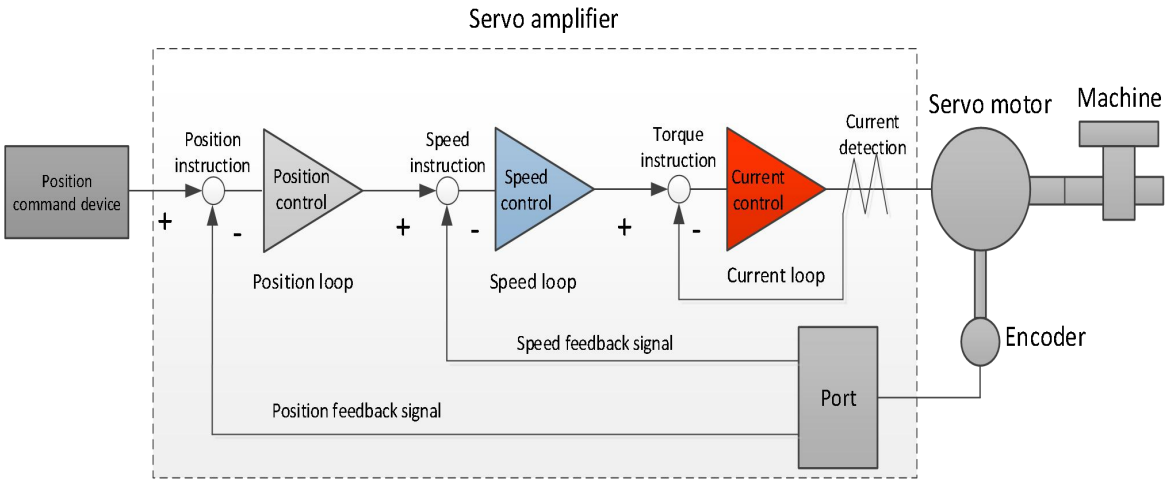

Figure 5－1 Servo system control diagram

The servo drive is the control core of the servo system. By processing the input signal and feedback signal, the servo drive can accurately control the position, speed and torque of the servo motor, that is, the position, speed, torque and mixed control mode. Among them, position control is the most important and commonly used control mode of servo system.

According to the command mode and operation control characteristics of the servo drive, it can be divided into three control modes, namely, position mode, speed mode and torque mode.

Position control is to control the position of the motor through the position command. The target position of the motor is determined by the total number of position instructions, and the rotation speed of the motor is determined by the position instruction frequency. By means of an internal encoder (the servo motor has its own encoder) or an external encoder (full closed-loop control), the servo drive can achieve fast and precise control of the position and speed of the machine. Therefore, the position control mode is mainly used in situations where positioning control is required.

Speed control is to control the speed of the machine through the speed command. By communicating the given speed instructions, the servo drive can achieve fast and accurate control of the mechanical speed. Therefore, the speed control mode is mainly used for the occasion of controlling the speed, or the occasion of using the upper computer to achieve position control, and the upper computer output as the speed command input to the servo drive.

The current and torque of the servo motor are linear, so the control of the current can realize the control of the torque. Torque control is to control the output torque of the motor through the torque command. Torque instructions can be given by communication.

5.1 Server Status

5.1.1 Server Status

The use of servo wheels must follow the process specified in the DS402 protocol to operate in the designated state.

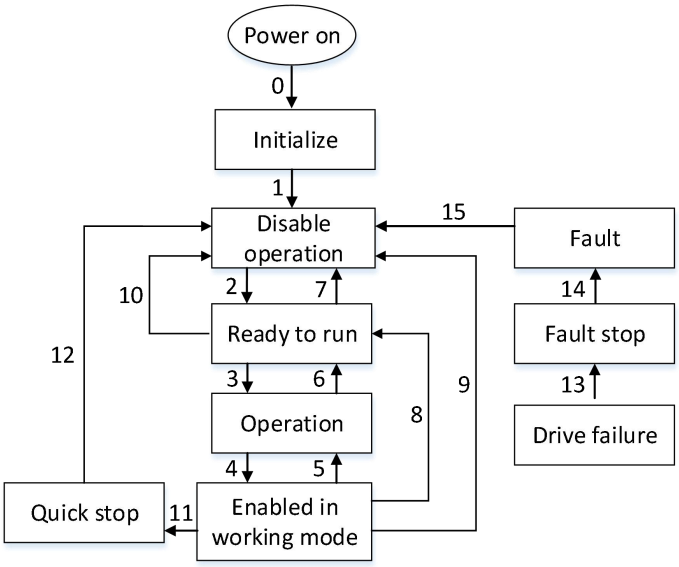

Figure 5－2 DS402 state machine

Each state is explained in the following table:

Table 5－1 State description

State	Explanation
Initialize	The drive is in the initializer state and cannot set parameters.
Disable operation	The drive is in the initializer state and cannot set parameters.
Ready to run	The drive is ready to run, you can set parameters to allow the drive to be enabled.
Operation	The driver main power circuit is ready but not powered, parameters can be set and allow the driver to be enabled.
Enabled in working mode	The driver is in the enable state, the main power circuit is energized to start the drive function, and the motor is running. Some parameters cannot be set in this state.
Quick stop	Execute the quick stop command and the motor stops according to the quick stop mode.
Fault stop	The driver fails and the motor stops according to the error stop mode.
Fault	The drive is in the faulty state and the fault shutdown has been completed. Enable the drive after troubleshooting and resetting the fault.

Table 5－2 Control commands and status switching description

Serial number	Status switching	Trigger event (bit3~bit0)	Drive state (bit7~bit0)
0	Power-on state → Initialization state	After the driver is powered on, it automatically switches the status without sending the control word	The drive initializes itself
1	Initialize state → Disable state	Automatically switches the status without delivering the control key	The drive communicates normally
2	Forbidden State → Ready State	Control word Enter 6	The status word is changed to 31
3	Ready State → Running state	Control word enter 7	The status word is changed to 33

4	Running State → Working Mode Enable state	Control word enter F	The status word is changed to 0037
5	Working Mode Enable state → Running state	Control word enter 7	The status word is changed to 0033
6	Running State → Ready state	Control word Enter 6	The status word is changed to 0031
7	Ready State → Disable State	Control word Enter 0	The status word is changed to 0070
8	Working Mode Enable status → Ready state	Control word Enter 6	The status word is changed to 0031
9	Working Mode Enable state → Disable State	Control word Enter 0	The status word is changed to 0070
10	Ready State → Disable State	Control word Enter 0	The status word is changed to 0070
11	Working Mode Enable state → Fast Stop state	Control word Enter 2	The status word is changed to 0050
12	Fast Stop state → Disable state	When the quick stop function is complete and the quick stop mode is 0, 1, 2, or 18, the drive automatically switches to the disabled state	Disable the driver and turn off the main power supply
13	→ Fault shutdown state	In the initialization, disable running, running ready, running, working mode enabled, fast stop state automatically switched when the fault condition is reached	Stop according to the error stop mode
14	Fault Stop state → Fault state	Automatic switchover	The status word is changed to 0038 The driver function needs to be disabled and the main power supply needs to be turned off
15	Fault state → Disable state	Control word Enter 86 Switch status Error reset command from I/O or remote control	The status word is changed to 0031 If the drive exception has been cleared, use the control word bit to clear the fault state
16	Quick Stop State → Working Mode Enable state	When the quick stop mode is 5 or 6, the control word input F switches the status	The drive function needs to be enabled

5.1.2 Control word and status word description

The following table describes the control words and status words:

Table 5－3 Control word and status word

Name	Index address	Property	Type	Unit	Explanation
Control word	60400010	RWLTM	Uint16	HEX	bit0: Switch_on bit1: Enable_voltage bit2: Quick_stop bit3: Enable_operation bit4: Set_Point bit5: Immed_Change bit6: Related_Abs bit7: Fault_reset bit8: Halt bit9: Reserved0 bit10: Reserved1 bit11: Manufacture0 bit12: Manufacture1 bit13: Manufacture2 bit14: Manufacture3 bit15: Manufacture4

Status word	60410010	RLTM	Uint16	HEX	bit0: Ready_on bit1: Switched_on bit2: Operation_enable bit3: Fault bit4: Voltage_enable bit5: Quick_stop bit6: Switchon_disabled bit7: Warning bit8: Maunufacture0 bit9: Remote bit10: Target_reached bit11: Intlim_active bit12: Setpoint_Ack bit13: FIlowing_Error bit14: Commutation_Found bit15: Reference_Found

5.1.2.1 Control word description 604000

Table 5-4 Control word declaration

Control word	State	Meaning	Note
bit0	0	Drive running - invalid	For details, see Table 5-2
	1	Drive running - valid	
bit1	0	Main power circuit ready - invalid	
	1	Main power circuit ready - valid	
bit2	0	Quick stop - valid	
	1	Quick stop - invalid	
bit3	0	Servo running - invalid	
	1	Servo running - valid	
bit4	0→1	Indicate that a new displacement command is pre-enabled. Whether the command is successfully enabled depends on the servo state	Position mode
	1→0	Indicates that bit12 of control word 6041h is pre-cleared. Whether it is successfully cleared depends on the servo status	
	0	Origin mode is not activated	Origin mode
	0→1	Active origin mode	
	1	The origin return to zero is in progress	
	1→0	Interrupt origin return to zero	
	0	Interrupt interpolation	Interpolation mode
	1	Enable interpolation	
bit5	0	Acceleration and deceleration, trapezoidal speed, target position is not updated	F→2F
	1	Acceleration and deceleration, trapezoidal speed, target position update immediately	
bit6	0	Target position 607Ah is a position instruction for absolute positioning	Position mode
	1	Target position 607Ah is a position instruction for relative positioning	
bit7	0→1	Fault reset - Rising edge effective	Fault reset
	1	Fault reset complete	
bit8	1	The servo motor is suspended	Applicable to operating modes other than torque mode (4 mode)
	0	Servo motor continues to run (continue to perform the previous task)	
bit9	Reserve		
bit10			
bit11			

bit12	0	The target position 607Ah is a position instruction for absolute positioning and does not update the contour trajectory according to the change of the target position	Position mode
	1	Target position 607Ah is a position instruction for absolute positioning, which updates the contour trajectory in real time according to the change of target position	
bit13	Reserve		
bit14			
bit15			

Motor lock shaft: 0x2F/0x0F
Motor loose shaft: 0x06
Error reset: 0x86
Absolute position mode: 0x2F→0x3F
Absolute positioning mode immediately as target position changes: 0x103F
Relative position mode: 0x4F-->0x5F
Find the origin: 0x0F->0x1F

5.1.2.2 Status Word Description 604100

Table 5－5 Status word description

Control word	State	Meaning	Note
bit0	0	Servo no fault - invalid	For details, see Table 5-2
	1	Servo fault-free - valid	
bit1	0	Waiting to turn on the servo enable - invalid	
	1	Wait to turn on the servo enable - Valid	
bit2	0	Servo ready to run - invalid	
	1	Servo ready to run -valid	
bit3	0	Fault-invalid	
	1	Fault-valid	
bit4	0	Power on the main circuit-invalid	
	1	Power on the main circuit-valid	
bit5	0	Quick stop - valid*	
	1	Quick stop - invalid*	
bit6	0	Servo ready- invalid	
	1	Servo ready- valid	
bit7	0	The servo has no warning status word	
	1	Servo in warning status word	
bit8	Reserved, undefined		
bit9	0	DIN defines enable/reset faults, IO controls	
	1	Telecommunication control	
bit10	0	Target position, zero speed, target speed not reached	Target arrival
	1	Position, speed , zero speed reached	
bit11	0	The actual position does not reach the soft limit or hard limit	Positive/negative limit
	1	The actual position reaches the soft limit/hard limit position, and input the reverse shift instruction can make the motor exit the position limit state and clear the bit	
bit12	0	The servo can receive new displacement commands	position mode
	1	The servo cannot receive new shift instructions	
		Origin return to zero error	Origin mode

	0	User speed is not zero	Speed mode
	1	User speed is zero	
bit13	0	The position following error does not exceed the maximum following error	Position following error
	1	The position following error exceeds the maximum following error	
bit14	0	No motor excitation found or motor excitation missing	Excitation state
	1	Motor excitation found	
bit15	0	The origin return to zero has not been performed or completed	Origin state
	1	The origin has been returned to zero. The reference point has been found	

5.2 Speed Mode (-3, 3) description

The speed mode has two modes: 3 and -3. The speed mode can be controlled by external I/0 control and internal instruction writing.

Table 5－6 Speed mode parameters description

Internal address	Type	Name	Description	Value
6060.00	Integer8	Operation_Mode	-3: In immediate speed mode, the actual speed will immediately reach the target speed; 3: For the speed mode with acceleration and deceleration, the actual speed will be accelerated to the target speed;	-3 and 3
6040.00	Unsigned16	Controlword	0x0F Motor lock shaft 0x06 Motor loose shaft	0x0F.0x06
60FF.00	Integer32	Target_Speed	The target speed cannot exceed the rated motor speed	According to user demand
6083.00	Unsigned32	Profile_Acc	It takes effect in mode 1 and mode 3	The default is 100rps/s
6084.00	Unsigned32	Profile_Dec	It takes effect in mode 1 and mode 3	The default is 100rps/s
607E.00	Unsigned 8	Invert_Dir	invert motion 0: CCW is positive dirction (default value) 1: CW is positive direction	0.1

Note

The speed position direction control cannot be modified in the enabled state.

5.2.1 Related Function Settings

5.2.1.1 DIN Speed mode introduction

The setting interface of DIN speed segment opens in the upper computer software.

Table 5-7 DIN Speed mode introduction

Internal Address	Bits	Name	Description	Value
2020.05	Integer32	Din_Speed[0]	The speed instruction for the drive is specified by the DIN speed [x], where the x is the BCD code from the following signals: Bit 0: Din speed index 0; Bit 1: Din speed index 1; Bit 2: Din Speed index 2; The situation where all the medians are 0 cannot occur;	User defined
2020.06	Integer32	Din_Speed[1]		
2020.07	Integer32	Din_Speed[2]		
2020.08	Integer32	Din_Speed[3]		
2020.14	Integer32	Din_Speed[4]		
2020.15	Integer32	Din_Speed[5]		
2020.16	Integer32	Din_Speed[6]		
2020.17	Integer32	Din_Speed[7]		
6083.00	Unsigned32	Profile_Acc	When the operating mode is 3 mode, the trapezoidal acceleration and trapezoidal deceleration must be set, otherwise the response speed segment will not be performed	
6084.00	Unsigned32	Profile_Dec		

Table 5-8 DIN speed segment settings

DIN speed index 0	DIN speed index 1	DIN speed index 2	Corresponding velocity segment	Value
0	0	0	Din_Speed[0]	User defined
1	0	0	Din_Speed[1]	
0	1	0	Din_Speed[2]	
1	1	0	Din_Speed[3]	
0	0	1	Din_Speed[4]	
1	0	1	Din_Speed[5]	
0	1	1	Din_Speed[6]	
1	1	1	Din_Speed[7]	

0 means the signal is off, 1 means the signal is on.

The following points need to be noted when activating DIN speed mode：

1.DIN speed mode is only available in 3 or -3 operation_mode, invalid in other working modes.

2.Analog-speed control (250207) is 0, close the analog-speed channel.

3.At least one of DIN speed index 0, DIN speed index 1 and DIN speed index 2 is defined in the digital input DIN as the switching signal of the speed segment.

5.2.1.2 Speed to function

The Speed to window can be used to monitor whether the actual speed feedback is consistent with the target speed instruction. When the speed error window monitored in speed mode is less than the speed to window set value, the output speed is to, and the BIT10 of the status word is set to 1.

Relevant parameter：

Internal Address	Bits	Name	Description	Value
60F9.1C	Integer32	Speed_Error	Speed error window	\
60F9.0A	Integer32	Target_Speed_Window	Target_Speed_Window,Under velocity mode,if |Speed_Error|(60F9.1C)<Target_Speed_Window means target reached,Statusword Bit10=1;	Default 100rpm

5.2.1.3 Zero speed function

Zero speed monitoring can be used to verify that the absolute value of the motor's speed feedback is less than the zero speed window set value. If so, the current motor is considered to be close to the zero speed stationary state, and the bit12 of the status word is set to 1.

Relevant parameter：

Internal Address	Bits	Name	Description	Value
2010.18	Unsigned16	Zero_Speed _Window	When the absolute value of the actual velocity -ms (60F9.1A) is less than or equal to the zero velocity window (2010.18), and the duration is greater than or equal to the zero velocity time (60F9.14), the zero velocity function is output	Default 3inc/ms
60F9.14	Unsigned16	Zero_Speed _Time		Default 10ms

5.2.1.4 Maximum speed limit function

In speed mode, the maximum forward and reverse speed can be limited by setting the maximum speed limit 607F.00. However, it always does not exceed the maximum operating speed allowed by the motor.

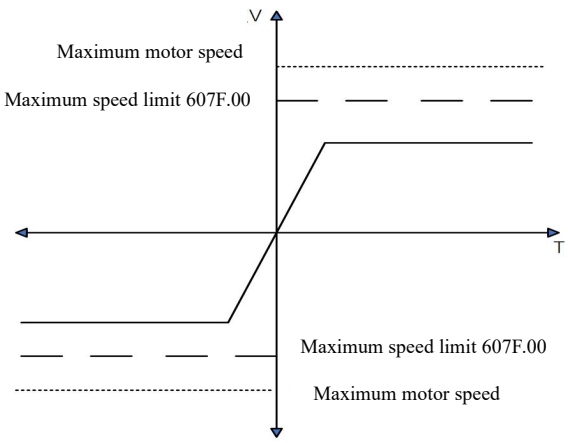

Figure 5-3 Maximum speed limit diagram

Relevant parameter：

Internal Address	Bits	Name	Description	Value
607F.00	Unsigned32	Max_Speed	Maximum motor speed limit	Default 5000rpm

5.3 Torque mode (4)

In torque mode, the driver will control the output torque of the motor set by the user during operation.

Table 5－9 Description of related parameters of torque mode

Internal Address	Bits	Name	Description	Value
6060.00	Integer8	Operation_Mode	Select the working mode according to the actual control mode. 4 is the torque mode	4
6071.00	Integer16	Target_Torque%	Percentage of the target torque to the rated torque	User defined
6040.00	Unsigned16	Controlword	Enable drive	0006→000f
607F.00	Unsigned32	Max_Speed	Motor operating maximum speed limit	User defined
60F5.06	Integer16	Torque_OUT_Ref	The limit value, the actual torque exceeds the reference data and the duration exceeds the filter time, the output torque of the Dout port reaches the setting, the unit is Ap	User defined
60F5.07	Integer16	Torque_OUT_Filter	When the actual torque reaches the reference value and the duration exceeds the filter time, Dout output torque reaches the setting, the unit is ms, the maximum is 32767	User defined
60F5.08	Integer16	Current_OUT_Real	Monitors the actual torque, the unit in Ap	/

Note

The torque reach setting function of Dout can be used in any working mode.

5.3.1 Related function Settings

5.3.1.1Maximum speed limit function in torque mode

In torque mode, the maximum forward and reverse running speed can be limited by setting the maximum speed limit of 607F.00. However, it always does not exceed the maximum operating speed allowed by the motor.

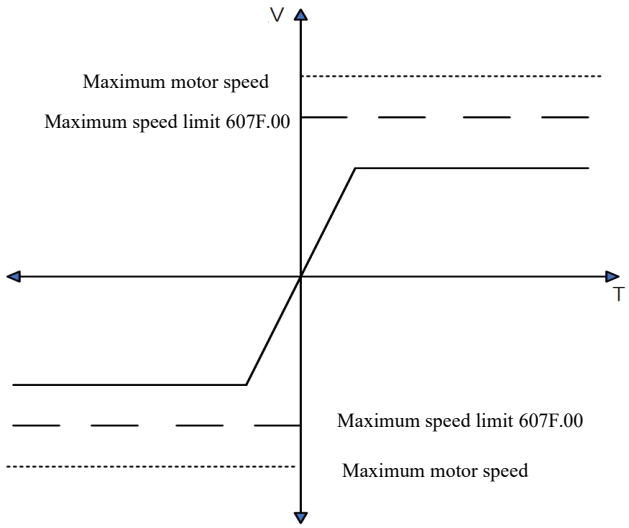

Figure 5-4 Maximum speed limit diagram

Relevant parameter：

Internal Address	Bits	Name	Description	Value
607F.00	Unsigned32	Maximum speed limit	Maximum motor speed limit	Default 5000rpm

5.3.1.2 Torque reaches the preset function

The torque reach function is to judge whether the target torque command value reaches the set torque reference value and output the corresponding torque reach signal for the host computer. When the actual torque reaches the set torque reaches the benchmark and the duration is the set torque reaches the filtering time, the corresponding signal is output.

Relevant parameter：

Internal Address	Bits	Name	Description	Value
60F5.06	Integer16	Torque_OUT_Ref	The limit value, when the reference data is exceeded, the output torque reaches the setting, the unit is Ap, and the setting is 0, which means that the torque reaches the limit detection is not enabled	Default 0Ap
60F5.07	Integer16	Torque_OUT_Filter	Torque reaches filtering time	Default 100ms
60F5.08	Integer16	Current_OUT_Real	Monitor actual torque parameters, unit : Ap	\

5.4 Position mode (1)

In the position mode, the driver control motor can carry out absolute position positioning and relative position positioning, and the speed and position instructions are controlled by the target position and ladder speed inside the driver.

Table 5－10 Position mode parameter description

Internal Address	Bits	Name	Description	Value
6060.00	Integer8	Operation_Mode	The way to control the servo motor	1
607A.00	Integer32	Target_Position	Target absolute/relative position	User defined
6081.00	Unsigned32	Profile_Speed	Speed command in position mode	User defined
6083.00	Unsigned32	Profile_Acc	Acceleration of trapezoidal curve	User defined
6084.00	Unsigned32	Profile_Dec	Trapezoidal curve deceleration	User defined
6040.00	Unsigned16	Controlword	0x2F->0x3F: activates the absolute position instruction, does not execute the absolute position instruction immediately according to the change of the target position, used when the working mode is 1 0x4F->0x5F: Activates the relative position instruction, used when the working mode is 1 0x103F: Absolute position command is executed immediately when the target position changes. This command is used when the working mode is 1 0x06->0x0F Enables the drive	0x2F->0x3F 0x4F->0x5F 0x06->0x0F 0x103F

5.4.1 Related function settings

5.4.1.1DIN Position mode introduction

First, at least one of the DIN position indexes 0, Din position indexes 1, and Din position indexes 2 must be defined in the I/O configuration as a switching signal for the position segment when using Din position mode.

The setting interface of DIN position segment can be opened through the menu bar of the upper computer software.

Table 5-11 DIN position mode introduction

Internal address	Bits	Name	Description	Value
2020.01	Integer32	Din_pos[0]	The speed instruction of the drive is specified by DIN speed [x], where x is a BCD code consisting of the following signals: bit 0: Din_pos[0]; bit 1: Din_pos[1] ; bit 2: Din_pos[2]; The case where the digits are all 0 cannot occur;	User defined
2020.02	Integer32	Din_pos[1]		
2020.03	Integer32	Din_pos[2]		
2020.04	Integer32	Din_pos[3]		
2020.10	Integer32	Din_pos[4]		
2020.11	Integer32	Din_pos[5]		
2020.12	Integer32	Din_pos[6]		
2020.13	Integer32	Din_pos[7]		
2FF1.01	Unsigned8	Din_position_select_L	Select the position segment L to be set (L range is 0-7, corresponding to the internal position segment 0-7 in turn)	
2FF1.02	Integer16	Din_position_M	Number of pulses set in position segment (L) =M*10000+N	
2FF1.03	Integer16	Din_position_n		

Table 5-12 DIN position mode related IO settings

DIN	Function introduction
Enable	Drive enable
Command activation	ctivate position instructions, such as the control word from 0x2F to 0x3F
DIN position Index 0	DIN position index [x] is specified, where the x is a BCD code composed of the following signals: Bit 0: Din position index 0; Bit 1: Din location index 1; Bit 2: Din location index 2;
DIN position Index1	
DIN position Index2	
DOUT	**Function introduction**
Multi-function signal 0	The driver executes the selected position segment program and outputs a multifunction signal after reaching the Din position [x], where the x is a BCD code composed of the following signals: Bit 0: multi-function signal 0; Bit 1: multi-function signal 1; Bit 2: multi-function signal 2;
Multi-function signal 1	
Multi-function signal 2	

Table 5-13 DIN position mode related settings

Internal address	Name	Value	Unit
2020.0E	Din_Mode1	1	DEC
2020.02	Din_Pos1	User defined	DEC
2020.06	Din_Speed 1	User defined	rpm
6083.00	Profile_Acc	User defined	rps/s
6084.00	Profile_Dec	User defined	rps/s

After enabling, select the position segment to go, the simulation instruction is activated, the driver executes the selected position segment program, and outputs the multi-function signal 0 after reaching the Din position [1].

Remind

- In the multi-segment position mode, the position to signal of Din positions 1-7 segments is represented by the BCD code composed of the multi-function signal 0-2.
- Command activation can set the bit4 of the control word to activate the position command, and the level change of DIN position index 0~2 can also activate the position command, but when the first segment is positioned as DIN position 0 after enablement, DIN position 0 cannot be activated due to no level change of the non-index signal, so the DIN input port is required to define the command activation.

5.4.1.2 Position-to-function

The Position to window can be used to monitor whether the actual position feedback is consistent with the target position instructions. When the speed error window monitored in speed mode is less than the speed to window set value, the output speed to, BIT 10 of the status word is set to 1.

Relevant parameter：

Internal address	Bits	Name	Description	Value
60F9.1C	Integer32	Speed_Error	Speed error window	\
60F9.0A	Integer32	Target_Speed_Window	Target_Speed_Window,Under velocity mode,if |Speed_Error|(60F9.1C)<Target_Speed_Window means target reached,Statusword Bit10=1;	Default 100rpm

5.4.1.3 Position following error monitoring function

The position following error (60F4.00) function is to calculate the difference between the given instruction of the effective target position (60FC.00) and the feedback instruction of the actual position (6063.00). When the difference accumulates to the set maximum following error (6065.00) threshold, the alarm position following error is allowed to be too large.

Relevant parameter：

Internal address	Bits	Name	Description	Value
6063.00	Integer32	Pos_Actual	The actual position of the motor	\
6065.00	Unsigned32	Max_Following_Error	Follow the error alarm limit value	Default 10rpm
60F4.00	Integer32	Pos_Error	The difference between the actual position and the effective target position	\
60FC.00	Integer32	Pos_Demand	Target position instruction after PID adjustment	\

5.5 Homing mode (6)

In some applications, the system requires every movement of the mechanical load to start from the same position, so the user can meet the demand by using the homing mode. In homing mode, the user can define an origin or zero point to ensure that the mechanical load runs from the same starting point every time. The operation interface of origin mode can be opened by menu bar ->**Specialist** -> **Control Modes** -> **Homing mode**. The operation interface after opening is shown as follows:

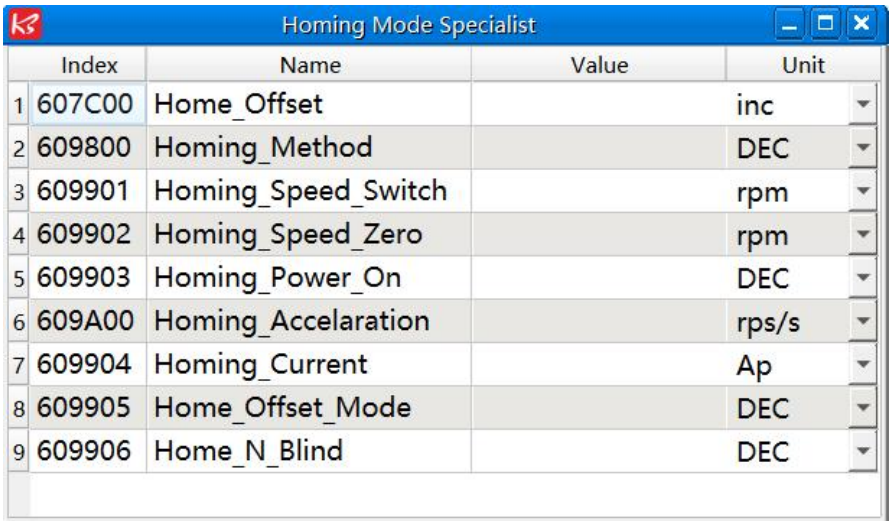

Figure 5－5 Homing mode interface

Table 5－14 Homing mode parameter description

Internal address	Name	Bits	Value	Meaning
607C0020	Home_Offset	Integer32	User defined	The offset position setting of the final positioning from the origin position
60980008	Homing_Method	Integer 8	User defined	Find the origin of the way to choose
60990220	Homing_Speed_Zero	Unsigned32	User defined	Find the origin signal velocity
60990308	Homing_Power_On	Unsigned 8	0，1	The origin search function is performed once after each power-on
609A0020	Homing_Accelaration	Unsigned32	User defined	Find the acceleration at the origin
60990120	Homing_Speed_Switch	Unsigned32	User defined	Look for the speed of the origin switch, limit switch signal
60990410	Homing_Current	Integer16	User defined	The maximum current setting when finding the origin
60990508	Home_Offset_Mode	Unsigned 8	0，1	Origin offset mode control 0: Run to the origin offset 1: Run to the origin event trigger point, after the end of the actual position will be "- origin offset"
60990608	Home_N_Blind	Unsigned 8	0，1	Origin index signal blind area
60600008	Operation_Mode	Integer8	6	Homing mode
60400010	Controlword	Unsigned16	0x0F->0x1F	Trigger back to origin

Note

Homing_Power_On=1 causes the motor to start rotating as soon as the controller is enabled after power on or reboot. Consider all safety issues before using.

Home_N_Blind：

If the homing mode needs home signal (position limit / home switch) and index signal, Home_N_Blind function can avoid the homing result being different with the same mechanics, when the Index signal is very close to the home signal. By setting to 1 before homing, the controller detects a suitable blind window for homing automatically. It can be used to assure that homing results are always the same.

During homing, the index signal inside this blind window is ignored after the home signal is found.

Home_N_Blind (0:0rev;1:0.25rev;2:0.5rev) is defaulted to 0. If it's set to 1, it's changed to 0 or 2 after homing depending on the index signal position relative to the homing signal.This parameter needs to be saved. If the mechanical assembly is changed or the motor has been replaced, just set it to 1 again for initial homing.

Table 5-15 Homing mode introduction

Homing mode	Description	Schematic
1	Z phase pulse trigger signal with negative limit as origin	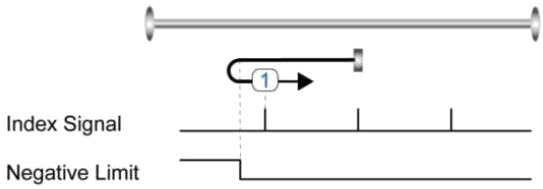
2	Z-phase pulse trigger signal with positive limit as origin	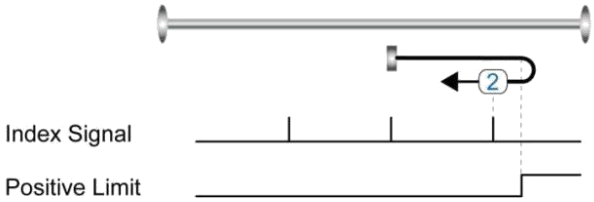
3	The origin switch signal is the Z-phase pulse trigger signal, and the initial motion direction is positive	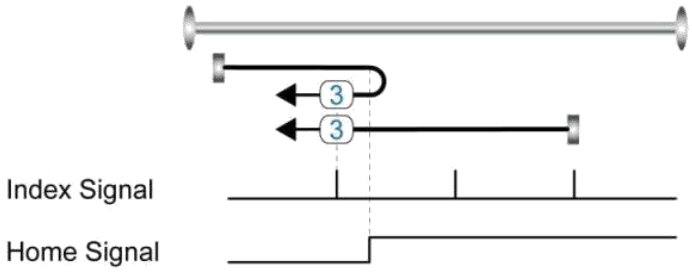
4	The origin switch signal is the Z-phase pulse trigger signal, and the initial motion direction is positive	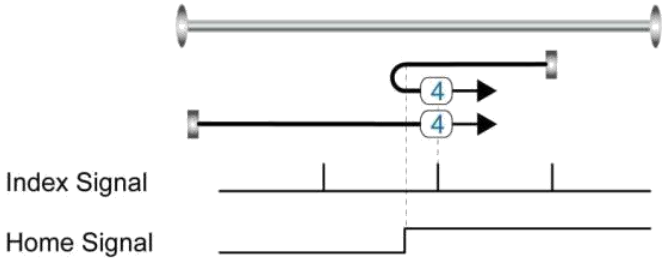

5	The origin switch signal is the Z-phase pulse trigger signal, and the initial motion direction is negative	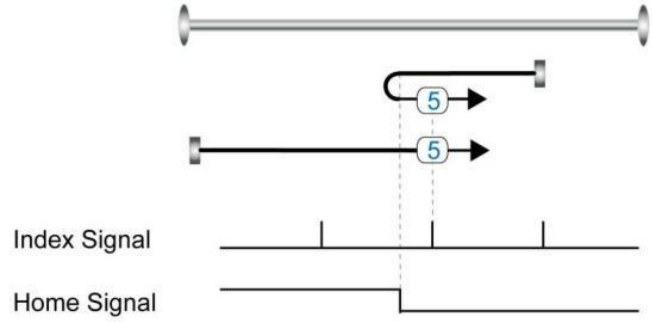
6	The origin switch signal is the Z-phase pulse trigger signal, and the initial motion direction is negative	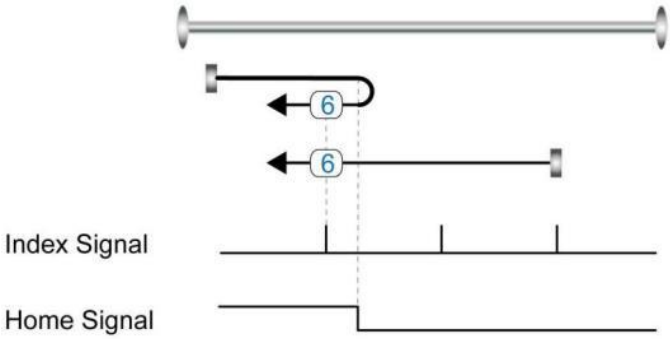
7	With double limit, the origin switch signal is the Z-phase pulse trigger signal, and the initial direction of movement is positive	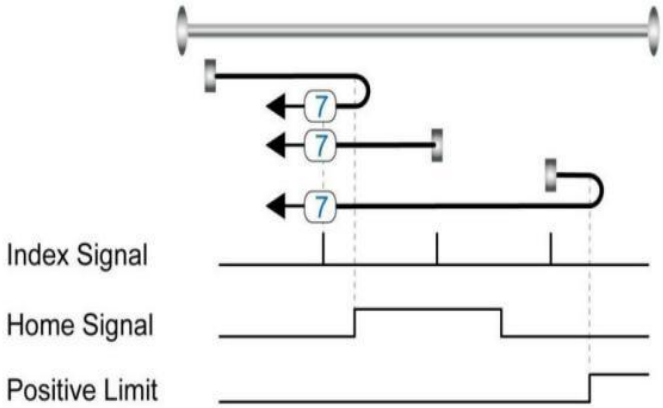
8	With double limit, the origin switch signal is the Z-phase pulse trigger signal, and the initial direction of movement is positive	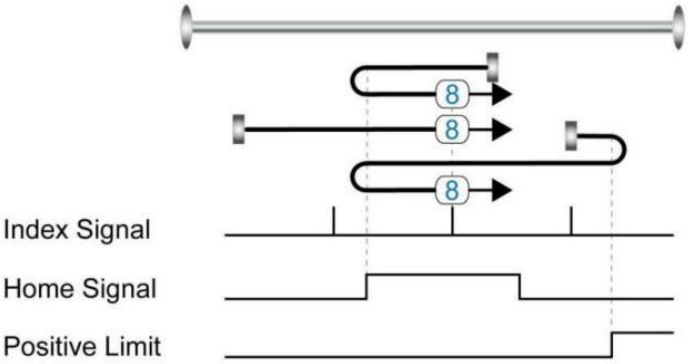

9	With double limit, the origin switch signal is the Z-phase pulse trigger signal, and the initial direction of movement is positive	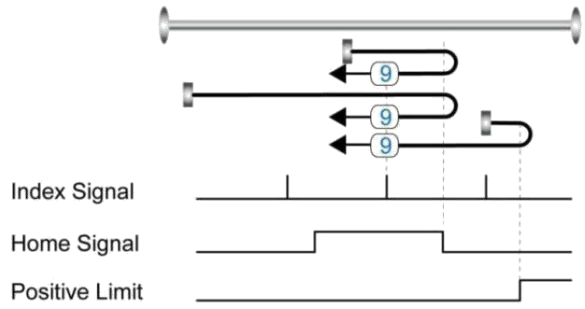
10	With double limit, the origin switch signal is the Z-phase pulse trigger signal, and the initial direction of movement is positive	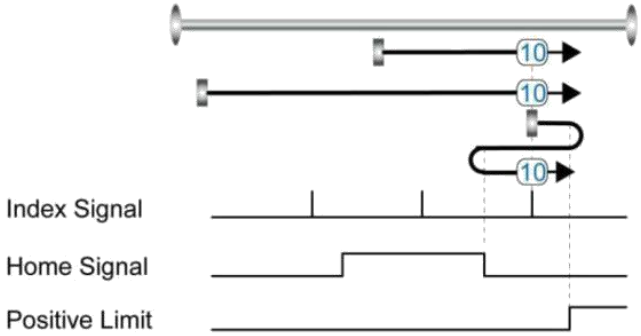
11	With double limit, the origin switch signal is the Z-phase pulse trigger signal, and the initial movement direction is negative	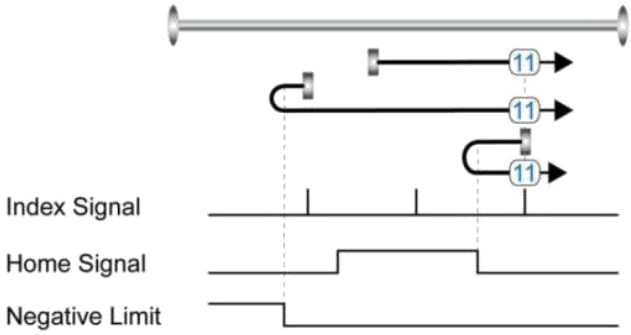
12	With double limit, the origin switch signal is the Z-phase pulse trigger signal, and the initial movement direction is negative	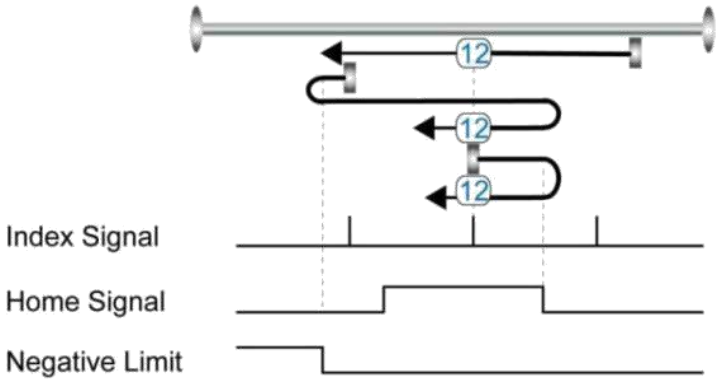

13	With double limit, the origin switch signal is the Z-phase pulse trigger signal, and the initial movement direction is negative	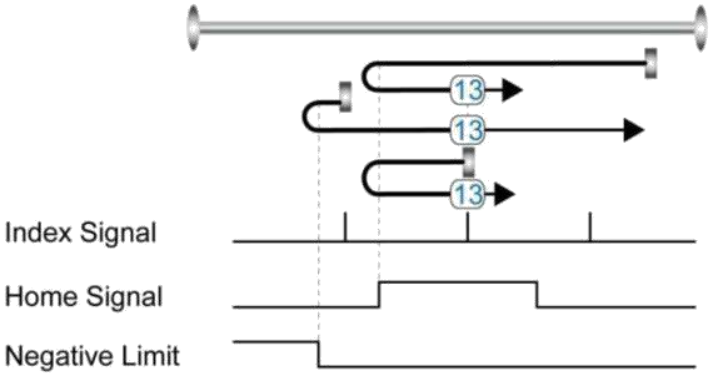
14	With double limit, the origin switch signal is the Z-phase pulse trigger signal, and the initial movement direction is negative	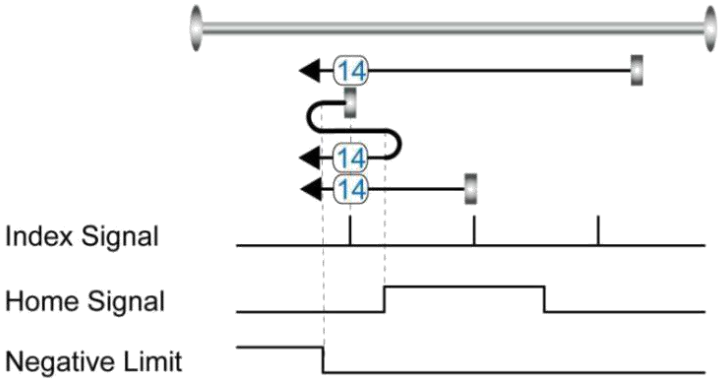
17	Take the negative limit as the origin signal	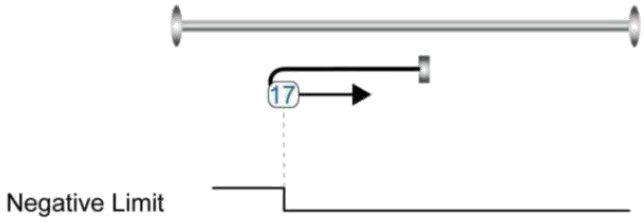
18	Take the positive limit as the origin signal	

19	The external origin switch is the origin trigger signal, and the initial motion direction is positive	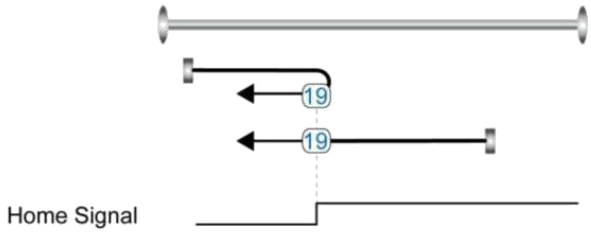
20	The external origin switch is the origin trigger signal, and the initial motion direction is positive	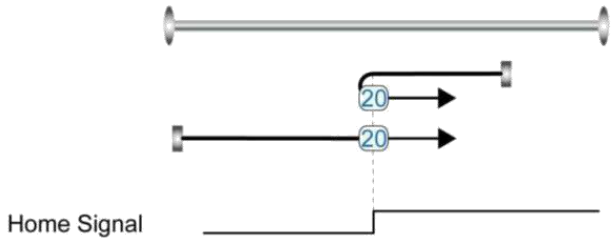
21	The external origin switch is the origin trigger signal, and the initial motion direction is negative	
22	The external origin switch is the origin trigger signal, and the initial motion direction is negative	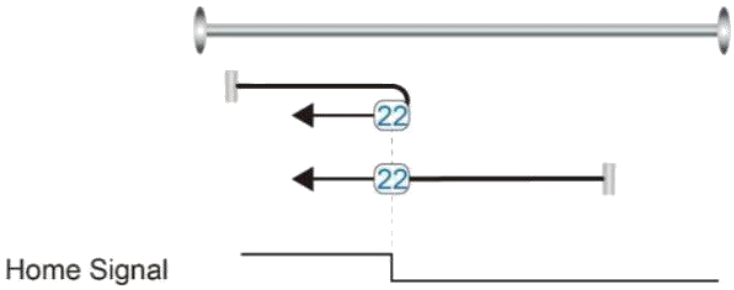

23	With double limit, the external origin switch is the origin trigger signal, and the initial direction of movement is positive	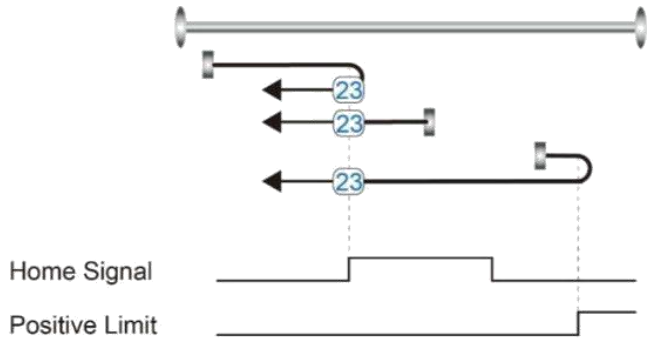
24	With double limit, the external origin switch is the origin trigger signal, and the initial direction of movement is positive	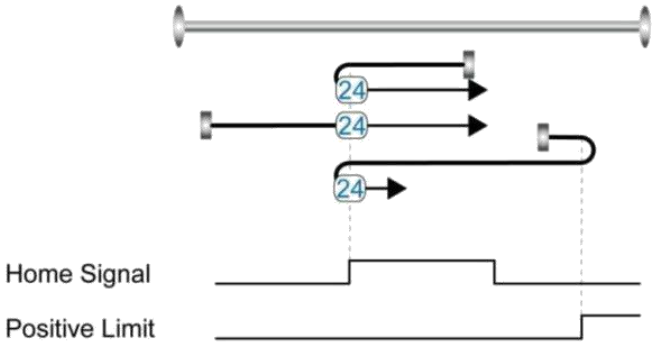
25	With double limit, the external origin switch is the origin trigger signal, and the initial direction of movement is positive	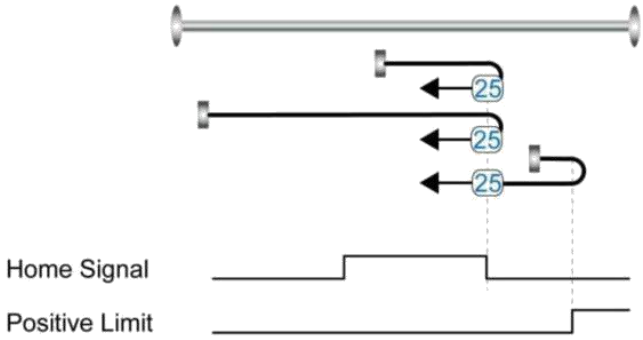
26	With double limit, the external origin switch is the origin trigger signal, and the initial direction of movement is positive	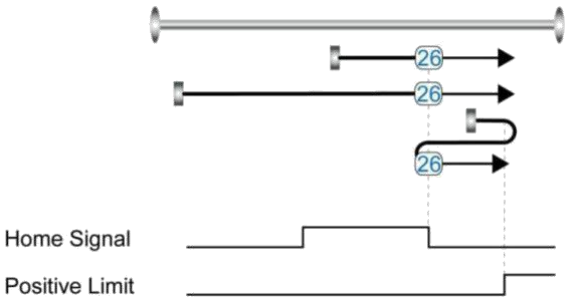
27	With double limit, the external origin switch is the origin trigger signal, and the initial direction of movement is negative	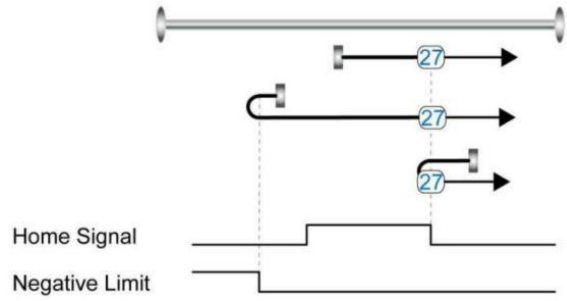

28	With double limit, the external origin switch is the origin trigger signal, and the initial direction of movement is negative	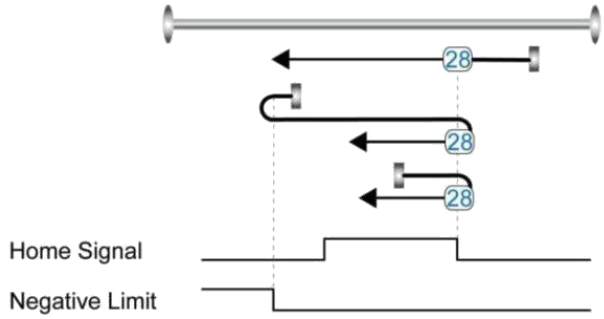
29	With double limit, the external origin switch is the origin trigger signal, and the initial direction of movement is negative	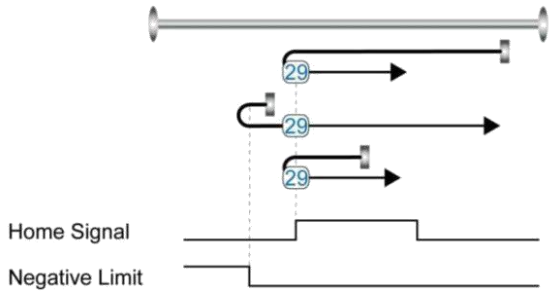
30	With double limit, the external origin switch is the origin trigger signal, and the initial direction of movement is negative	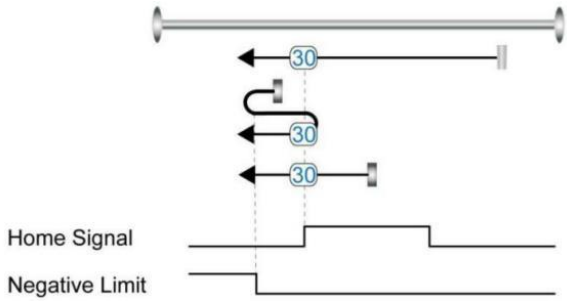
33, 34	Take the next Z phase pulse signal of the motor as the origin	
35	Take the current position of the motor as the reference origin	
-17, -18	Refer to the origin mode where the mechanical end position is the origin	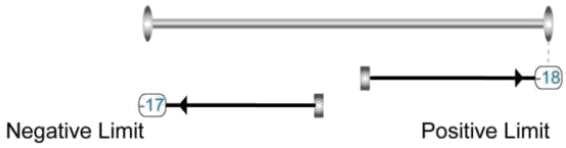

5.6 Other application control functions

5.6.1 Limit function

In order to ensure that the motor runs within the range allowed by the mechanical structure, the motor can be prevented from running beyond the range by inputting a limit signal.

Table 5-16 Limit setting instruction

Internal address	Bits	Name	Description
2010.06	Unsigned16	DIN4 Function	Define digital input DIN 4。Default value 0010，Indicates the definition of the positive limit function
2010.07	Unsigned16	DIN5 Function	Define digital input DIN5。Default value 0020，Indicates the definition of the negative limit function
2010.1B	Integer32	Positive limit position	Actual position when the digital input signal triggers the positive limit
2010.1C	Integer32	Negative limit position	Actual position when the digital input signal triggers the negative limit
2010.19	Unsigned8	Limit function define	The function of defining whether to alarm after the limit signal occurs 0：If the limit signal appears after homing, it will alarm 1: it will not alarm when the limit signal appears after homing
607D.01	Integer32	Positive setting of soft limit	Soft limit positive polarity data setting
607D.02	Integer32	Soft limit negative setting	Soft limit negative data setting, the negative data must be less than the positive data, otherwise the soft limit will not work
6085.00	Unsigned32	Quick stop deceleration	Stop deceleration after the limit signal takes effect

(1) Digital input limit digital

By installing the sensor in the machine and connecting the external sensor signal to the digital input signal port of the drive, when the sensor level changes, the positive and negative limit signals take effect, and the motor stops. For safety reasons, the positive/negative limit signals are normally closed . When the valid input is 1 (the valid input is green), the limit function is invalid. When the valid input is 0 (the valid input is gray), it means that the limit is activated and the corresponding movement direction is prohibited.

(2) Soft limit position

To prevent overtravel by setting the position of the software limit, it should be noted that the position of the software limit only takes effect after homing. When the actual position reaches the set software limit position, the motor stops.

Table 5-17 Brake control related objects

Internal address	Bits	Name	Description
6410.17	Unsigned8	Additional device	whether the motor has any addition device 0：Motor without brake 1：Motor with brake,before the brake close totally,driver will keep working for some time
6410.11	Unsigned16	Brake duty cycle	Duty cycle of the lock signal. By changing the on-time (pulse width) and switching frequency of the switching device, the output voltage or current is controlled to reduce the temperature rise. The duty cycle of the lock is adjustable from 70 to 100%, corresponding to the average chopper voltage from 0 to 24V. The default value is 70%, that is, the lock supply voltage is 24*70%=16.8V
6410.12	Unsigned16	Brake delay	Brake signal delay time. The default value is 150ms
605A.00	Integer16	Quick stop mode	0: stop without control 1: stop by using ramp, then switch off 2: stop by using quick stop deceleration, then switch off 5: stop with profile deceleration, stay in quick stop active 6: stop with quick stop deceleration, stay in quick stop active 18: using motor winding for brake even encoder is wrong The factory default is stop without control mode
6085.00	Unsigned32	Quick stop deceleration	Deceleration when thequick stop mode is 2

Note

It is not recommended that the duty cycle of the brake be less than 40% or higher than 90%. Otherwise, the brake cannot be opened or the lock heats up.

After the control word is written into the enable command, the servo motor is energized to lock the shaft, and the driver outputs 24V DC to the brake after the relay pull-in delay for a certain period of time (brake delay) to make the brake open as soon as possible. After the delay, the speed command takes effect and the motor starts to run.

When the stop enable command is written in the control word, the control of the holding brake is related to the set quick stop mode.

When the quick stop mode is 0 (uncontrolled stop), the drive will automatically switch to the immediate speed mode (-3) and set the target speed to 0 internally to make the motor stop as soon as possible, in the uncontrolled stop mode After the drive changes the target speed, it will immediately cut off the 24V power supply to the brake. After the brake power is cut off and lasts for a certain period of time (the brake delay), the drive actually enters the disabled state, and the motor is powered off and the shaft is released.

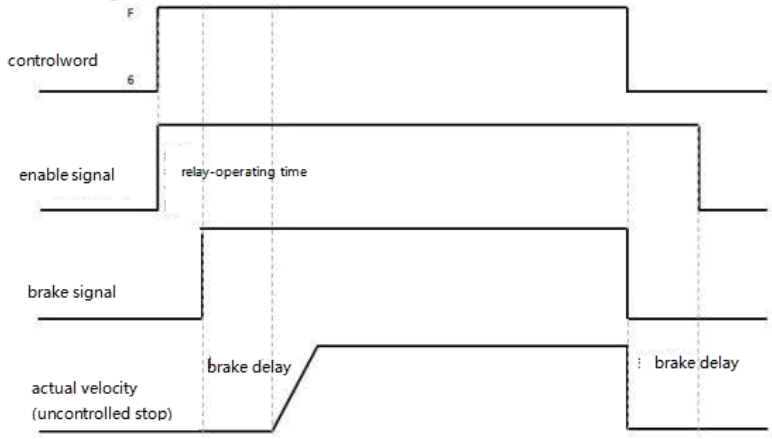

Figure 5-6 Motor holding brake sequence when quick stop mode is 0

When the quick stop mode is 2 (quick stop deceleration stop), the drive automatically switches to speed mode (3) and decelerates to stop at quick stop deceleration (60850020) when it is disabled. Only after the drive judges that the effective target speed is zero speed , the drive will cut off the 24V brake power supply. After the brake power supply has been cut off for a certain period of time (the brake delay time), the drive will enter the disabled state, and the motor will be disconnected from the power supply.

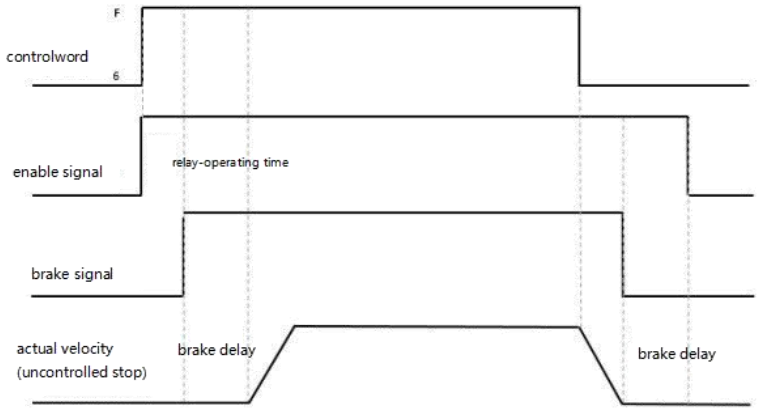

Figure 5-8 Motor brake sequence when quick stop mode is 2

Note

After the motor accessory is set to 1, the load drop will be disabled, and the brake delay can be appropriately increased. If adjusting the brake delay cannot improve the problem, check whether the brake torque meets the load demand.

5.6.2 Motor brake signal function introduction

OUT5 is the motor brake control output signal, which can be used to control the internal brake. If the brake motor is used, this function must be set, otherwise it will damage the motor. An effective output of green indicates that the brake is opened, and an effective output of gray indicates that the brake is closed.

Brake can also be manually controlled, after the "motor brake" of OUT5 is removed, click the simulation button, the effective output becomes green, indicating that the brake is opened, and then click the simulation button, the effective output becomes gray, indicating that the brake is closed. This feature is for debugging only!

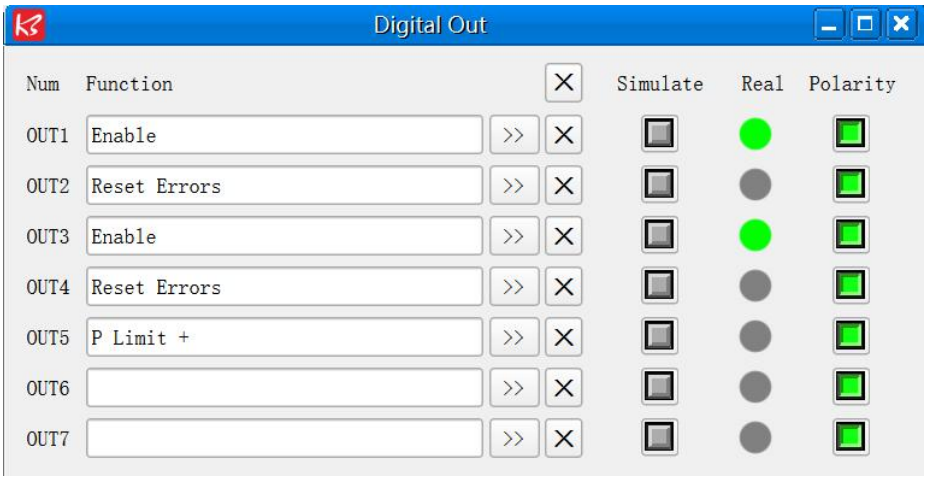

5.6.3 Stop Mode Control

The motor can be stopped in the following ways:

0. uncontrolled stop; the motor will directly cut off the power to loosen the shaft without any control, and stop naturally by friction. After the stop is completed, the motor loosens the shaft. The uncontrolled stop mode has a longer deceleration time, but less mechanical impact.

1. The curve stops; it stops according to the trapezoidal deceleration (60840020) curve, and the motor loosens the shaft after the stop is completed.

2. Quick stop deceleration stop; stop according to the quick stop deceleration (60850020), and the motor loosens the shaft after the stop is completed.

18. Short-circuit braking stop mode, use the motor's own resistance to stop. After the stop is completed, the motor keeps the shaft locked and stops in the fast stop state. It can be enabled after the control word sends 0x06 to exit the fast stop state. A stop mode that can quickly complete a stop even in the event of an encoder failure.。

5.Stop according to the trapezoidal deceleration (60840020). After the stop is completed, the motor keeps the

axis locked and stops in the fast stop state. It can be enabled after the control word 0x06 is issued to exit the fast stop state.。

6.Stop according to the quick stop deceleration (60850020). After the stop is completed, the motor keeps the axis locked and stops in the quick stop state. It can be enabled only after the control word sends 0x06 to exit the quick stop state.

Table 5-18 Stop controlling related objects

Internal address	Bits	Name	Description
605A.00	Integer16	Quick_Stop_Mode	quick stop mode (Controlword.bits.2=0, eg:Controlword=0x0F->0x0B) 0: stop without control 1: stop by using ramp, then switch off 2: stop by using quick stop deceleration, then switch off 5: stop with profile deceleration, stay in quick stop active 6: stop with quick stop deceleration, stay in quick stop active 18: using motor winding for brake even encoder is wrong
605B.00	Integer16	Shutdown_Stop_Mode	Shutdown stop mode The control word is switched to 0x06, and the motor switches from the lock shaft to the loose shaft state 0: stop without control 1: stop by using ramp, then switch off 2: stop by using quick stop deceleration, then switch off 18: using motor winding for brake even encoder is wrong
605C.00	Integer16	Disable_Stop_Mode	Disable stop mode Stop mode when bit3 in the control word is set to 0 For example, the control word is changed from 0x0F to 0x07 0: stop without control 1: stop by using ramp, then switch off 2: stop by using quick stop deceleration, then switch off 18: using motor winding for brake even encoder is wrong
605D.00	Integer16	Halt_Mode	Halt mode Pause mode when bit8 in the control word is set to 1 For example, the control word is changed from 0x0F to 0x10F 1: stop by current ramp 2: stop by quick stop deceleration
605E.00	Integer16	Fault_Stop_Mode	Fault stop mode The false stop mode will be activated after the motor is alerted in the locked shaft state. 0: stop without control 1: stop by using ramp, then switch off 2: stop by using quick stop deceleration, then switch off 18: using motor winding for brake even encoder is wrong
6084.00	Unsigned32	Profile_Dec	Deceleration of trapezoidal curve
6085.00	Unsigned32	Quick_Stop_Dec	Deceleration for quick stop
2340.01	Unsigned8	Step_Stop_Mode	The step mode stop enable is only effective under position control. When the position reaches the signal output, the motor locks the shaft by step (that is, the driver passes direct current to the motor to keep the motor locked shaft), and the lock shaft current is set by step stop current (2340.02). 0: disables the function in step mode. 1: disables the function in step mode
2340.02	Integer16	Step_Stop_Amp	The stop current after the step stop mode is enabled

Chapter 6 Performance adjustment

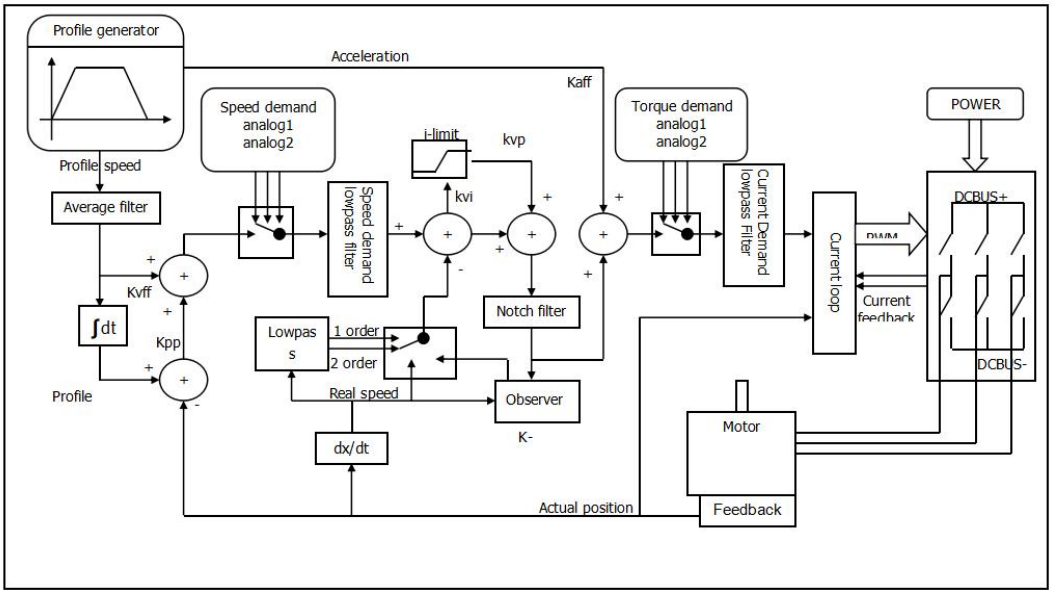

Figure 6－1 Servo system control block diagram

Figure 6-1 shows the servo system control block diagram. It can be seen from the figure that the servo system generally includes three control loops: current loop, velocity loop and position loop.For the servo system, good control loop parameters can improve the performance of the servo and better meet the field process requirements. Therefore, it is necessary to adjust good control loop parameters.

The parameters of speed loop and position loop should be adjusted during debugging. The speed loop parameter is related to the load inertia of the whole mechanical system converted to the motor shaft. The position loop is the outermost control loop of the servo system and is related to the motor action mode, that is, the field application. The current loop is the innermost control loop in the servo system, and the current loop parameters are related to the motor parameters. After the motor is correctly configured, the system defaults the current ring parameters to the best parameters of the configured motor, so there is no need to adjust again.

Remind

- kaff：Position loop acceleration feedforward
- kvff：Position loop speed feedforward
- kvp：Velocity loop proportional gain
- kvi：Velocity loop integral gain
- kpp：Position loop proportional gain

6.1 Online auto-tuning

The online auto-tuning function of the servo wheel does not need to be separated from the controller program, and can be turned on at the touch of a button during the movement of the machine, by automatically calculating the load inertia and automatically adjusting the gain to the load state.

Table 6-1 Online auto-tuning function related parameters

Object index	Name	Description	Default	Range	R: read W: write S: save
0x234010	Auto_Tuning_Control	The BCD code consists of the following bits to determine the self-tuning mode: Bit0: Enables online self-tuning Bit1: Automatically adjusts kvp after online self-tuning Bit2: The acceleration feedforward is automatically adjusted after the online self-tuning Bit4: No self-tuning when running forward Bit5: No self-tuning when running in reverse Bit7: Use friction to calculate the load	12	0-31	RWS

6.2 Manual tuning

6.2.1Speed loop setting method

Table 6-2 Speed loop parameter

Internal address	Name	Description	Default	Range
60F901	kvp[0]	Setting reaction speed of speed loop	/	1-32767
2FF00A	Velocity_BW	Changing this parameter changes kvp[0] by the inertia ratio	/	1-700
60F902	Kvi[0]	Integral velocity loop gain	/	0-1023
60F907	Kvi/32	It is 1/32 of Kvi，used for high resolution encoder.	/	0-32767
2FF019	Kvi_Mix	The value of this parameter is 0x60F902 cross 32 plus 0x60F907. Writing this parameter sets 0x60F902 to 0，and the value is 0x60F907	/	0-16384
60F905	Speed_Fb_N	Used to set speed feedback filter bandwidth. Filter bandwidth=100+Speed_Fb_N*20	7	0-45
60F906	Speed_mode	Used to set the speed feedback mode 0: 2nd order FB LPF 1: Directly feedback the original velocity 2:Speed feedback after velocity observer 4: Speed feedback after 1st order LPF 10:Speed feedback after 2nd order LPF and the speed command is filtered by a 1st order LPF. Both filters have the same bandwidth. 11: The speed command is filtered by a 1st order LPF 12: Speed feedback after speed observer, the speed command is filtered by a 1st order LPF 14: Speed feedback after 1st order LPF and the speed command is filtered by a 1st order LPF. Both filters have the same bandwidth Bit7： 1：Use 8K Velocity loop sampling frequency and 2K position loop sampling frequency (for 23-bit encoders) 0：Use 4K Velocity loop sampling frequency and 1K position loop sampling frequency	0	/
60F915	Output_Filter_N	A 1st order lowpass filter in the forward path of the velocity loop	1	100-1370
60F908	Kvi_Sum_Limit	Integral output limit of the velocity loop	/	0-2^15

Speed loop adjustment steps are as follows:

Step 1：Adjustment for Kvp

Increasing Kvp can improve the bandwidth of the velocity loop and make the velocity response ability faster. To calculate the Kvp, please refer the following formula：

$$kvp = \frac{1.853358080 \times 10^5 \times J \times \pi^2 \times B}{I_{Max} \times Kt \times Encoder}$$

Kt	Motor torque constant, unit N.m/Arms*100
J	System moment of inertia, unit kg*m^2*10^6
B	Speed loop bandwidth, unit Hz
I_{Max}	Maximum current (6510.03) in DEC
Encoder	Encoder resolution

Because the -3 of Operation_mode has no acceleration and deceleration and does not participating the velocity loop control, the -3 mode and automatic flip mode can be used to run the motor when adjusting the velocity loop parameters. During the reciprocating motion, the responsiveness of the servo can be monitored by collecting the speed step curve

If the Kvp too low, the bandwidth of the velocity loop and the position loop will not match, which will lead to oscillation. If the Kvp is too high, it will cause the speed to overshoot and cause the speed loop to oscillate. In some rigid connection loads (such as ball screw, rack and pinion, etc.) The Kvp should be as high as possible. By comparing the oscillograms under different Kvp, find the optimal curve – the actuall speed curve should be tight follows the target command and does not have velocity oscillations.

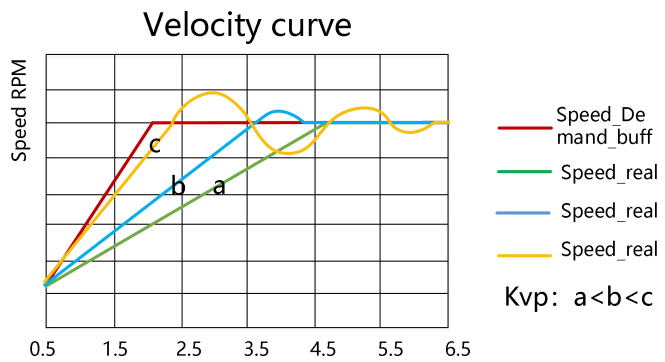

Figure 6-2 Speed step curve after Kvp adjustment

Remind

- Speed step curve: Curve that shows rise/fall changes.
- The vibration and noise of the motor can be felt by hand touch and listening

Step 2 : Adjustment for Kvi

Kvi is designed to eliminate static errors. It can strengthen the low frequency gain of the velocity loop, and a large Kvi can reduce the response ability from low-frequency disturbance, thereby improving the anti-disturbance capability in low-frequency.

When Kvi is too small, The integral time will be long. The error adjustment will be slow, and it will take longer time to make the system entering steady state. When the integral gain of the speed loop is too large, the error will appear and in severe cases, the motor may oscillate. Kvi should be adjusted to the servo eliminating the error and enter a stable state efficiently.

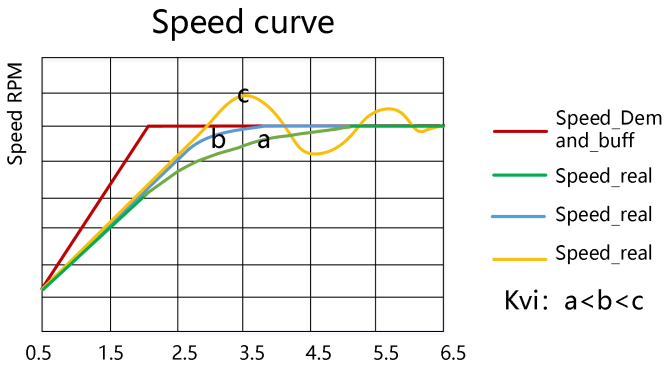

Figure 6-3 Speed step curve after Kvi adjustment

Generally, if the machine has more friction, the kvi should be set larger. If the entire system needs to respond quickly, kvi should be set as small as possible. If you need to dynamically close kvi during operation, you can use the kvi close in Din function.

Remind

- Kvi32=1/32 of Kvi[0]，In high resolution encoder, directly increasing the data in the kvi[0] will lead to overshoot. At this time, you can reduce the data in kvi[0], and fine-tune it in the kvi32
- Generally,the parameters of kpp and kvi are relative. When the kpp data is adjusted to be much larger than the factory value, the kvi should also be appropriately increased on the basis of the factory value.

Step 3：Adjustment of Kvi_Sum_Limit

The Kvi_sum_Limit is the maximum current limit when performing adjustment。 Usually the default value can satisfy most applications. However, if the application system has a large resistance or the acceleration is too large, so that the actual current has reached the Kvi_sum_limit current, and at the same time, the actual speed is far less than the target speed. The value of this parameter should be increased. If the output current is prone to saturation, but the saturated output current will cause low frequency oscillations, this parameter should be reduced.

The Kvi_sum_limit should be as small as possible on the basis of satisfying the applicaition. The smaller the Kvi_sum_limit value, the shorter the adjustment time.

Step 4：Adjustment for Speed_fb_N

Feedback filter can reduce noise from the feedback path, eg, encoder resolution noise.

For different applications, the speed feedback filter can be converted to 1st and 2nd order by Speed_Mode.

1st order can reduce more noise, but produce less phase shift, allowing the higher Kvi or Kvp.

2nd order filter reduces more noise, but also provide more phase shift, which can limit the Kvi or Kvp.

Usually, if the machine and the load use soft connection, it is recommended to use a 1st order low-pass feedback filter or turn off the feedback filter. If the rigid connection is used or the load is too heavy, the 2nd order low-pass feedback filter could be used. Factory default is a 2nd order low-pass feedback filter, which is suitable for most applications.

If the motor noise is too loud when adjusting the Kvi or Kvp， you can appropriately reduce the speed feedback filter parameter(60F9.05). However, the velocity loop feedback filter bandwidth F must be greater than 2 times of the velocity loop bandwidth. Otherwise, oscillation may result. Speed feedback filter bandwidth F = speed feedback filter*20+100 [HZ].

Step 5：Adjustment of output filter

The output filter is a first order low pass torque filter. It can reduce the high-frequency torque order output by

the speed control loop, so as to achieve the purpose of suppressing the resonance of the entire system.

When the output filter is set to 2546Hz (1DEC), it means to close the output filter control. When the system has resonance, the user can try to adjust the DEC value of the output filter setting from small to large to reduce noise.

The output filter frequency can be calculated by the following formula:

$$f = \frac{1}{2 \times \pi \times Ts \times Output_Filter_N}$$

Output_Filter_N Output filter setting(60F9.15), Unit DEC

Ts Constant 62.5us

Remind

- The larger the DEC value set by the output filter, the stronger the filtering effect.
- Output filter settings [Hz]=2546/[DEC]
- Output filter settings [DEC]=2546/[Hz]

Step 6: Notch Filter Adjustment

A notch filter can suppress the resonance frequency by reducing the gain near the mechanical resonance.

If the resonant frequency is unknown, it can be obtained by flowing method:

Adjust the load so that the system runs in the resonance region, monitor the actual current at resonance on the oscilloscope, and then adjust the notch filter to observe whether the resonance disappears. When the current data at resonance is collected on the software oscilloscope, the period value of adjacent harmonics can be measured by the cursor to calculate the resonance frequency. After collecting multiple sets of harmonic cycles to calculate the average value of the cycles, the resonant frequency can be calculated using the average value of the cycles.

Table 6-3 Notch filter parameter

Internal address	Name	Description	Default	Range
60F903	Notch filter	Used to set the frequency of the internal notch filter to eliminate the mechanical resonance that occurs when the motor drives the machine	550	100-2000
250B01	Notch filter 1			
250B02	Notch filter 2			
250B03	Notch filter 3			
60F904	Notch filter control	Notch filter control of Speed loop Bit0~1: The BCD code composed of two bits determines the filter to be turned on。 Bit4: 1 :Indicates FFT analysis using actual current, 0 :Indicates that the target current is used for analysis Bit5: 1: Indicates use actual speed for FFT analysis, 0: Indicates do not use actual speed for FFT analysis Bit.7: 1 indicates that the FFT function is turned on, it will automatically become 0 after the analysis is completed, and it can only be turned on in the enabled state.	0	0-255

(1) Single-point notch filter

When the notch filter control (60F9.04) is set to 0, it indicates to close the notch filter control; when set to1, it indicates to open a single notch filter, and the frequency of the filter is set by the notch filter (60F9.03) .

Table 6-4 Single notch filter debugging case

Description	Process
Limit output current of drive	The target current limit is adjusted through the basic operating interface of the servo software
Use the oscilloscope to collect the current waveform in the resonance region. Note that when collecting the current with the oscilloscope, the sampling period should be set as small as possible, otherwise the resonance waveform may not be collected.	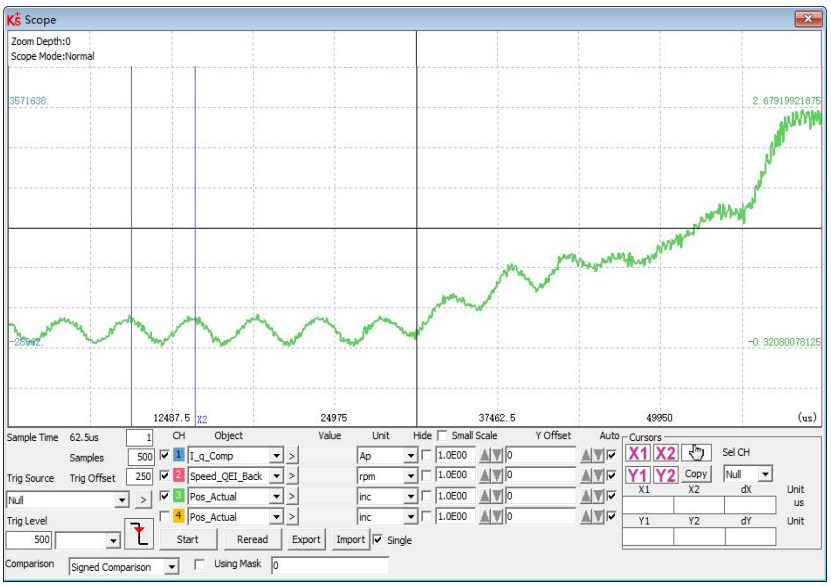
Observe the resonant frequency with an oscilloscope and calculate the notch filter setting value based on the frequency	The resonant frequency in the figure is 200Hz, the notch filter control is set to 1, and the notch filter is set to 200Hz
After adding a notch filter, collect the actual current waveform again, and adjust it until the current waveform is smooth and free of resonance.	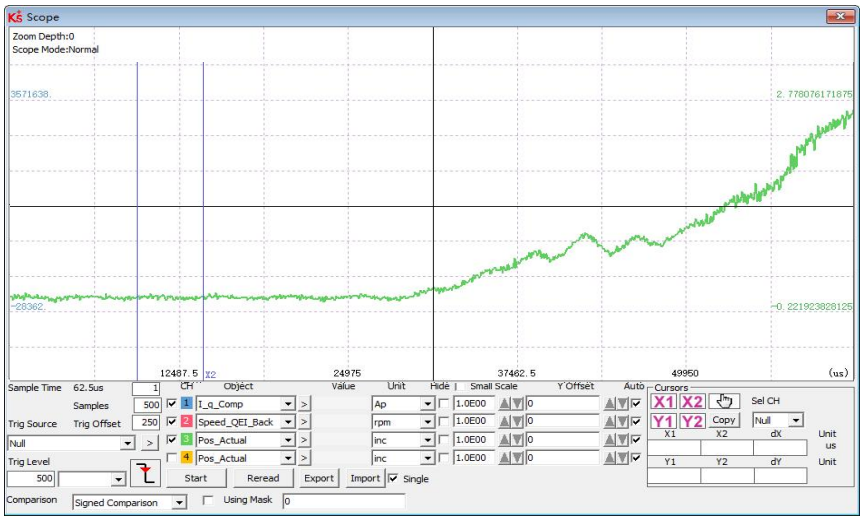

Note

- In order to prevent machine damage caused by large resonance amplitude during debugging, the value of target current limit can be reduced and then the notch filter can be adjusted.
- During the automatic setting of notch filter, the oscilloscope function cannot be used. After the setting is successful, the oscilloscope automatically switches the acquisition object, and click the reread data to display the FFT result amplitude.

(2)FFT Multi-point Notch Filter

The high order notch filter technology is acquired, the mechanical resonance frequency of the load is measured automatically, and the tuning results are written into filter 0 and filter 1. iWMC open a total of 4 notch filters, filter

0 and filter 1 are automatically adjusted notch filters, filter 2 and filter 3 are manually adjusted notch filters, and the corresponding filters can be turned on/off by the notch filter control.

When the notch filter control (60F9.04) is set to 128DEC, it indicates that the actual current is used for FFT analysis.When the FFT is successfully tuned, the notch filter control bit7 to reset, and the BCD code combined with bit0 and bit1 determines the filter to be turned on.

6.2.2 Position loop setting method

Table 6-5 Position loop parameter list

Internal address	Name	Description	Default	Range
60FB01	Kpp[0]	Set the response bandwidth of the position loop, unit: 0.01Hz	10	0～327
2FF01A	K_Velocity_FF‰	0 means no feedforward，1000 means 100% feed forward	1000	0～4000
2FF01B	K_Acc_FF‰	This parameter can only be set if the inertia ratio is set correctly. If you do not know the inertia ratio, please directly set the position loop acceleration feedforward (0x60FB03).	/	0-4000
60FB05	Pos_Filter_N	The average of N effective target velocities	1	1~255
2FF00E	Max_Followin_error_16	Maximum following error (6065.00)=100* Maximum following error 16	10000	/
60FB04	Position loop filter order	Set value 1: Use trapezoidal curve mode 3: Use S curve mode	1	1or 3

Position loop tuning steps:

Step 1：Kpp adjustment

Increasing the Kpp can increase the position loop bandwidth to reduce the positioning time and the following error, but if the setting is too large, it will cause noise or even oscillation, and it must be set according to the load conditions. Kpp = 103 * position loop bandwidth。 The bandwidth of the position loop cannot exceed the bandwidth of speed loop. It is recommended that the setting value of the position loop bandwidth be less than one quarter of the bandwidth of the speed loop.

Step 2：Kvff adjustment

Increasing the Kvff can reduce the position following error and improve the dynamic response characteristics of the entire system, but it may lead greater overshoot during acceleration and deceleration. When the position command signal is not smooth, reducing the Kvff can reduce the motor oscillation. When the feedforward is set to 0, if only the Kvp is used to position the servo, the in-position time will be longer.

Kvff function can be regarded as the upper controller, such as PLC, has the opportunity to directly control the velocity in position operating mode. In fact, the function will consume part of the speed loop responsiveness, so the setting value needs to match the position loop and velocity loop bandwidth.

The elastic factor of the flexible load, such as pulley, will cause the speed feedforward command loaded to the speed loop to be unsmooth and cause the load to oscillate. In this type of load, the position loop speed feedforward can be appropriately reduced. In a rigid load, if adjusting the Kpp cannot eliminate the vibration generated by the motor during acceleration and deceleration, you can also try to gradually decrease the default 100% feedforward.

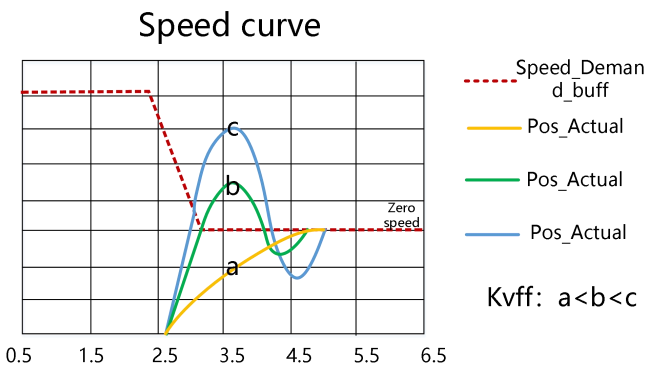

Figure 6-4 Speed step curve after Kvff adjustment

Step 3: Position loop acceleration feedforward adjustment

Users are not advised to adjust this parameter. When the practical application requires very high position loop response, the acceleration feedforward can be adjusted to improve the response performance.

The acceleration feedforward function can be seen as the upper controller has the opportunity to directly control the torque in the position operating mode. This function actually consumes some of the current loop responsiveness, so if the settings do not match the Kvp and velocity loop bandwidth, overshoot and oscillation will occur.

Also, the velocity feed forward to the velocity loop may not be smooth and has some noise signal inside, so a large velocity feed forward value will also amplify the noise.

Kaff can be calculated by following function:

ACC_%= 6746518 / K_Acc_FF / Easy_Kload * 100

ACC_% This means what percentage will be used for acceleration feedforward.

K_Acc_FF Kaff(60FB.03), calculates the final internal factor of the feedforward.

Note

The smaller the value of the K_Acc_FF parameter, the greater the position loop acceleration feedforward.

Step 4: Smooth filter adjustment

The smoothing filter is a moving average filter. It filters the velocity commands from the velocity generator to make the velocity and position commands smoother. Using this filtering causes velocity and position commands to be delayed in the drive. So for some applications, like CNC, it is better not to use this filter, but to do the smoothing in the CNC.

Smoothing filters reduce machine influence by smoothing commands. Smoothing Filter (60FB.05) defines the time constant of this filter in ms. Under normal circumstances, if the machine system vibrates when starting and stopping, it is recommended to increase the smoothing filter setting.

Step 5: Other adjustment

In position mode (operation mode 1), the position loop commend filter control(60FB.04) can be set to 3 to enable the S-curve control. This curve has no command delay and is suitable for long-distance positioning control. When the speed step of the trapezoidal speed curve is large, it will cause a certain impact on the mechanical equipment. The S-shaped curve has better flexibility and smooth acceleration and deceleration, which can effectively overcome the mechanical vibration caused by the sudden change of speed.

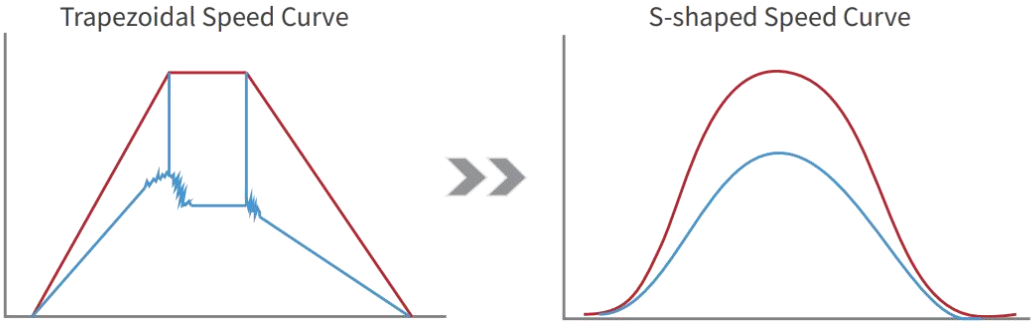

Figure 6-5 S-shaped speed step curve

Note

The S-curve is valid only in position mode (operating mode 1)

6.3 Gain switch (Pro mode)

This function is only used for professional ！

The drive support 4 sets of PI gain settings. Each set includes Kvp, Kvi, Kpp. The actual PI parameters used are Kvp (x), Kvi (x), and Kpp (x). x=data of PI pointer.

Table 6-6 Gain switching parameter

internal address	Type	Name	Description	Unit
60F9.01	Unsigned16	Kvp[0]	Gain parameter called when PI pointer is 0	Dec, Hz
60F9.02	Unsigned16	Kvi[0]		Dec
60FB.01	Integer16	Kpp[0]		Dec. Hz
2340.04	Unsigned16	Kvp[1]	Gain parameter called when PI pointer is 1	Dec, Hz
2340.05	Unsigned16	Kvi[1]		Dec
2340.06	Unsigned16	Kpp[1]		Dec. Hz
2340.07	Unsigned16	Kvp[2]	Gain parameter called when PI pointer is 2	Dec, Hz
2340.08	Unsigned16	Kvi[2]		Dec
2340.09	Unsigned16	Kpp[2]		Dec. Hz
2340.0A	Unsigned16	Kvp[3]	Gain parameter called when PI pointer is 3	Dec, Hz
2340.0B	Unsigned16	Kvi[3]		Dec
2340.0C	Unsigned16	Kpp[3]		Dec. Hz
60F9.28	Unsigned8	PI point	Indicates the PI parameter being called	Dec
60F9.09	Unsigned8	Auto PI switch	When the target position/target speed is reached, that is, when bits.Target_reached=1, select the PI parameter, which is suitable for the occasions where different PI parameters need to be used during the motion process and the static state: 0: PI pointer (60F9.28)=0; 1: PI pointer (60F9.28)=1;	Dec

6.3.1 Gain switching method

The driver provides three ways to dynamically select PI control parameters:

Method 1: Switch PI through a digital input port

Configure the function gain switch 0 or/and gain switch 1 at the digital input port, and the value of the PI pointer is the BCD code composed of the input:

Bit0: Gain switch 0

Bit1: Gain switch 1

Table 6-7 Correspondence between gain switching and PI pointer

Gain switch 0 Effective input level	Gain switch 1 Effective input level	Value of PI pointer
1	0	1
0	1	2
1	1	3

Example：

Figure 6-6 Gain switch definition

Gain switch 0 = 1， Gain switch 1 = 0， so PI pointer =1， Valid PI parameter is Kvp[1], Kvi[1], Kpp[1]

Method 2： Drive auto switch PI

Set auto switch PI （6069.09） = 1: When the motor is running, the PI pointer is 0; when the motor is in the position to or the motor zero speed state, the PI pointer is 1.

Some equipment with large inertia may be affected by inertia or elastic force and vibrate when it decelerates to stop. At this time, switching flexible PI parameters helps to achieve efficient shutdown. Automatic PI switching is suitable for applications where different PI parameters are required for these motors in running and stopped states. If the gain switching function is defined on the digital input port, the automatic gain switching will be invalid.

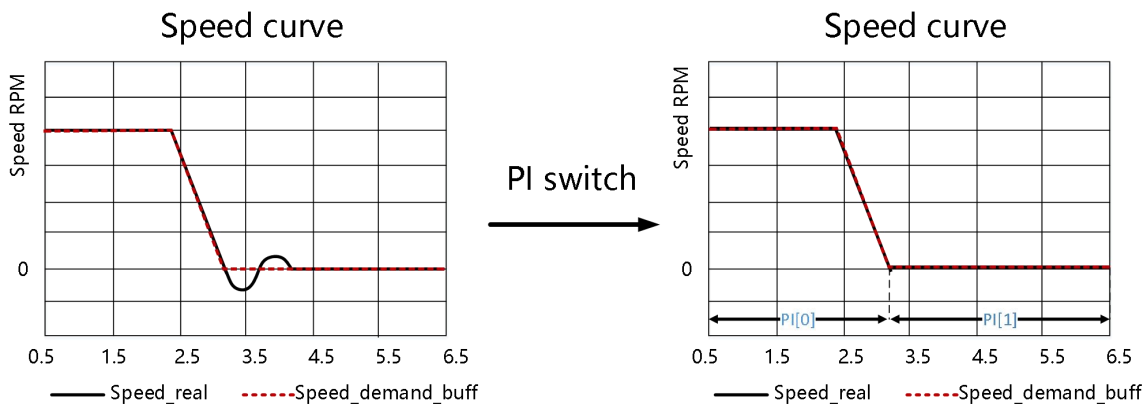

Method 3： Set PI pointer value directly through communication

6.4 Other factors affecting performance

Control commands created by a controller (e.g. PLC).

- Control commands should be as smooth as possible and must be correct and reasonable. For example, the acceleration in the control command cannot exceed the maximum acceleration that can be produced by the motor torque. By collecting the speed and current step waveforms, during the acceleration process, when the current is saturated and clipped, the acceleration and deceleration can be appropriately reduced or the smoothing filter can be increased.

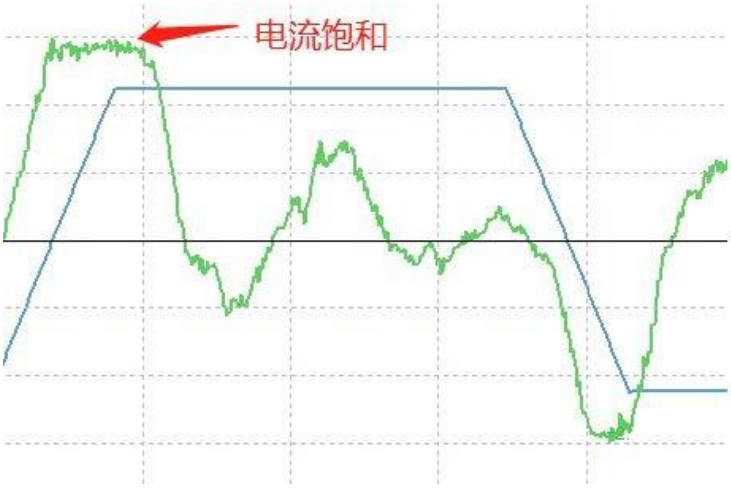

- The control command should follow the bandwidth limits of the control loop.

Mechanical design

In applications, performance is often limited by the machine. Various factors can affect the final control performance.

Control performance will affect the final performance of the machine such as accuracy, responsiveness and stability.

Chapter 7 List of Common Object Parameters

Note

- CANopen address and 232 communication address are the same
- Express register addressing in the form of Index (16-bit address) and Subindex (8-bit sub-address)
- The digit 0x08 indicates that the length of the data stored in this register is 1 Byte, the digit 0x10 indicates that the length of the data stored is 2 Bytes, and the digit 0x20 indicates that the length of the data stored is 4 Bytes
- R: readable，W: writable，S: savable，M: mappable；T: traceable, L: read in the control ring, B: need to save and restart
- A complete CANopen address is in the format of: 60400010 (control word)
- Modbus address is a 4-digit hexadecimal number
- A complete Modbus address format is: 3100 (control word)

Object list

Category	Index	Sub-index	Modbus address	Data type	Name
Category 1 [Input/Output Settings]	2010	01	0810	Unsigned16	Din_Polarity
		02	0820	Unsigned16	Din_Simulate
		03	0830	Unsigned16	Din1_Function
		04	0840	Unsigned16	Din2_Function
		05	0850	Unsigned16	Din3_Function
		06	0860	Unsigned16	Din4_Function
		0A	08A0	Unsigned16	Din_Real
		0D	08D0	Unsigned16	Dout_Polarity
		0E	08E0	Unsigned16	Dout_Simulate
		0F	08F0	Unsigned16	Dout1_Function
		10	0900	Unsigned16	Dout2_Function
		14	0940	Unsigned16	Dout_Real
		18	0980	Unsigned16	Zero_Speed_Window
		19	0990	Unsigned8	Limit_Function
Category 2 [Speed/position setting]	2020	01	0C10	Integer32	Din_Pos0
		02	0C20	Integer32	Din_Pos1
		03	0C30	Integer32	Din_Pos2
		04	0C40	Integer32	Din_Pos3
		05	0C50	Integer32	Din_Speed0
		06	0C60	Integer32	Din_Speed1
		07	0C70	Integer32	Din_Speed2
		08	0C80	Integer32	Din_Speed3
		10	0D00	Integer32	Din_Pos4
		11	0D10	Integer32	Din_Pos5
		12	0D20	Integer32	Din_Pos6
		13	0D30	Integer32	Din_Pos7
		14	0D40	Integer32	Din_Speed4
		15	0D50	Integer32	Din_Speed5
		16	0D60	Integer32	Din_Speed6
		17	0D70	Integer32	Din_Speed7
		0F	0CF0	Unsigned16	Din_Control_Word
Category3 [Error code]	2601	00	1F00	Unsigned16	Erroe_State
	2602	00	2000	Unsigned16	Erroe_State 2

Category	Index	Sub-index	Modbus address	Data type	Name
Category 4 [Storage parameter setting]	2FF0	01	2910	Unsigned8	Store_Data
		03	2930	Unsigned8	Store_Motor_Data
Category 5 [Control and status of equipment]	6040	00	3100	Unsigned16	Controlword
	6041	00	3200	Unsigned16	Statusword
Category 6 [Stop mode setting]	605A	00	3400	Integer16	Quick_Stop_Mode
	605B	00	3410	Integer16	Shutdown_Stop_Mode
	605C	00	3420	Integer16	Disable_Stop_Mode
	605D	00	3430	Integer16	Halt_Mode
	605E	00	3440	Integer16	Fault_Stop_Mode
Category 7 [Working mode setting]	6060	00	3500	Integer8	Operation_Mode
Category 8 [Basic parameter setting]	6063	00	3700	Integer32	Pos_Actual
	6065	00	3800	Unsigned32	Max_Following_Error
	6067	00	3900	Unsigned32	Target_Pos_Window
	606C	00	3B00	Integer32	Speed_Real
	6071	00	3C00	Integer16	Target_Torque%
	6073	00	3D00	Unsigned16	CMD_q_Max
	6078	00	3E00	Integer16	I_q
	607A	00	4000	Integer32	Target_Position
	607C	00	4100	Integer32	Home_Offset
	607D	01	4410	Integer32	Soft_Positive_Limit
		02	4420	Integer32	Soft_Negative_Limit
	607E	00	4700	Unsigned8	Invert_Dir
	6080	00	4900	Unsigned16	Max_Speed_RPM
	6081	00	4A00	Unsigned32	Profile_Speed
	6083	00	4B00	Unsigned32	Profile_Acc
	6084	00	4C00	Unsigned32	Profile_Dec
	6085	00	3300	Unsigned32	Quick_Stop_Dec
	60F6	08	5880	Integer16	CMD_q
	60FD	00	6D00	Unsigned32	Digital_Inputs
	60FF	00	6F00	Integer32	Target_Speed
Category 9 [Origin mode setting]	6098	00	4D00	Integer8	Homing_Method
	6099	01	5010	Unsigned32	Homing_Speed_Switch
		02	5020	Unsigned32	Homing_Speed_Zero
		05	5050	Unsigned8	Home_Offset_Mode
	609A	00	5200	Unsigned32	Homing_Accelaration
Category 10 [Speed loop parameters]	60F9	01	6310	Unsigned16	Kvp[0]
		02	6320	Unsigned16	Kvi[0]
		05	6350	Unsigned8	Speed_Fb_N
		07	6370	Unsigned16	Kvi/32
		0A	63A0	Integer32	Target_Speed_Window
		14	6440	Unsigned16	Zero_Speed_Time
Category 11 [Position loop parameter]	60FB	01	6810	Integer16	Kpp[0]
		02	6820	Integer16	K_Velocity_FF
		03	6830	Integer16	K_Acc_FF
		05	6850	Unsigned16	Pos_Filter_N
Category 12 [Alarm parameters]	6410	18	7180	Integer16	Temp_Motor_Ref
		19	7190	Integer16	Temp_Motor
	6510	07	8670	Unsigned16	Voltage_Under
		08	8680	Unsigned16	Chop_Voltage
		09	8690	Unsigned16	Voltage_Over

7.1Mode and Control (0x6040)

Name	CANopen	Modbus	Command Properties	Data type	Unit	Initial value	Explanation
Control word	60400010	3100	RWLTM	Unsigned16	HEX	0006	0x06：Loose shaft 0x0F：Lock shaft 0x0B：Quick stop, load stop - voltage disconnect 0x2F→3F：Enter the absolute positioning mode 0x4F→5F：Enter relative positioning mode 0x103F：Immediate absolute positioning as target position changes 0x0F-1F：homing 0X86：Error reset
Status word	60410010	3200	RLTM	Unsigned16	HEX	0218	The status byte shows the status of the drive bit0：Ready_on bit1：Switched_on bit2：Operation_enable bit3：Fault bit4：Voltage_enable bit5：Quick_stop bit6：Switchon_disabled bit7：Warning bit8：Internal retention bit9：Remote bit10：Target_reached bit11：Internal limit activation bit12：Pulse response bit13：Fllowing_Error bit14：Commutation_Found bit15：Reference_Found
Operating mode	60600008	3500	RWLM	Integer8	DEC	-4	1：Positioning mode with position ring 3：Speed mode with position loop 4：Torque mode -3：Speed loop(Immediate velocity mode) -4：Pulse mode 6：Homing mode 7：Motion interpolation based on CANopen
Absolute/ relative position control selection	20200F10	0CF0	RWSL	Unsigned16	HEX	002F	When the "Drive Enable" function is configured to Din and the corresponding Din valid input is 1, the "Control word" (6040.00) is set to this value; 0x2F：Absolute position control 0x4F：Relative position control

7.2 Metrical data

Name	CANopen	Modbus	Command Properties	Data type	Unit	Initial value	Explanation
Actual position	60630020	3700	RLTM	Integer32	inc	0	Actual motor position
Actual current value	60780010	3E00	RLTM	Integer16	Ap	0.00	Rated current
Input port status	60FD0020	6D00	RLTM	Unsigned32	HEX	0	bit0: negative limit switch bit1:positive limit switch bit2: home switch bit4: interlock
Actual speed	606C0020	3B00	RLTM	Integer32	rpm	0.00	rpm

Note

0x606C0020，The unit conversion method is DEC=[(RPM*512* Encoder resolution)/1875]

7.3 Target object (0x607A)

Name	CANopen	Modbus	Command Properties	Data type	Unit	Initial value	Explanation
Velocity position direction control	607E0008	4700	RWSL	Unsigned8	DEC	0	Run polarity reversal 0: Counterclockwise is the positive direction 1: Clockwise is the positive direction
Target position	607A0020	4000	RWLTM	Integer32	inc	0	The target position in position mode 1, if the control word is set to start motion, transitions to the valid command position inc
Trapezoidal velocity	60810020	4A00	RWLTM	Unsigned32	rpm	0.00	Trapezoidal velocity (rpm) in operating mode 1
Target speed	60FF0020	6F00	RWLTM	Integer32	rpm	0.00	Target speed in mode 3 and -3,
Max velocity limit	60800010	4900	RWL	Unsigned16	rpm	5000	Default:5000rpm
Trapezoidal acceleration	60830020	4B00	RWSLTM	Unsigned32	rps/s	100.00	Default：100rps/s
Trapezoidal deceleration	60840020	4C00	RWSLTM	Unsigned32	rps/s	100.00	Default：100rps/s
Target torque	60710010	3C00	RWL	Integer16	%	0.00	Torque command in torque mode, the percentage of target torque to rated torque
Target current	60F60810	5880	RWLTM	Integer16	Ap	0.00	Current command in torque mode
Target current limit	60730010	3D00	RWSLTM	Unsigned16	Ap	48.00	Current instruction maximum

Note

- Velocity address：0x60810020，0x60800020，0x60FF0020
- The unit conversion method is 为 DEC=[(rpm*512*encoder resolution)/1875]
- Acceleration and deceleration address：0x60830020，0x60840020，
- The unit conversion method is DEC=[(rps/s*65536*encoder resolution)/4000000]
- Current address：0x60710010，0x60730010
- The unit conversion method is 1Arms=[2048/(Ipeak/1.414)]DEC Note: Ipeak is peak current (6510.03)

7.4 Multi-segment position/Multi-segment speed (0x2020)

Name	CANopen	Modbus	Command Properties	Data type	Unit	Initial value	Explanation
Multi-stage position control 0	20200120	0C10	RWSL	Integer32	DEC	0	Din position [x] is meaningful only if at least one of Din Position Index 0, Din Position Index 1, or Din Position Index 2 is configured to Din; x=0~7, is the BCD code composed of the three indexes; bit0: Din Location index 0 bit1: Din Location index 1 bit2: Din Location index 2 When one of the bits is configured to Din, the unconfigured bits are equal to 0
Multi-stage position control 1	20200220	0C20	RWSL	Integer32	DEC	0	
Multi-stage position control 2	20200320	0C30	RWSL	Integer32	DEC	0	
Multi-stage position control 3	20200420	0C40	RWSL	Integer32	DEC	0	
Multi-stage Position Control 4	20201020	0D00	RWSL	Integer32	DEC	0	
Multi-stage Position Control 5	20201120	0D10	RWSL	Integer32	DEC	0	
Multi-stage position control 6	20201220	0D20	RWSL	Integer32	DEC	0	
Multi-stage position control 7	20201320	0D30	RWSL	Integer32	DEC	0	
Multi-stage speed control 0	20200520	0C50	RWSL	Integer32	rpm	0.00	The speed instruction of the driver is specified by the DIN speed [x], where the x is a BCD code composed of the following signals: bit 0: Din speed index 0; bit 1: Din speed index 1; bit 2: Din Speed index 2; The situation where all the medians are 0 cannot occur;
Multi-stage speed control 1	20200620	0C60	RWSL	Integer32	rpm	0.00	
Multi-stage speed control 2	20200720	0C70	RWSL	Integer32	rpm	0.00	
Multi-stage speed control 3	20200820	0C80	RWSL	Integer32	rpm	0.00	
Multi-stage speed control 4	20201420	0D40	RWSL	Integer32	rpm	0.00	

Name	CANopen	Modbus	Command Properties	Data type	Unit	Initial value	Explanation
Multi-stage speed control 5	20201520	0D50	RWSL	Integer32	rpm	0.00	
Multi-stage speed control 6	20201620	0D60	RWSL	Integer32	rpm	0.00	
Multi-stage speed control 7	20201720	0D70	RWSL	Integer32	rpm	0.00	

7.5 Performance object (0x6065)

Name	CANopen	Modbus	Command Properties	Data type	Unit	Initial value	Explanation
Max following error	60650020	3800	RWSLM	Unsigned32	inc	524288	Following error value alarm value Default 524288inc
target location window	60670020	3900	RWSL	Unsigned32	inc	327	“Target location reached”target range，Default 10inc
reach position time window	25080910	1990	RWSLTM	Unsigned16	ms	10	Target（location.velocity）reach time window，Determine the reach position signal together with 0x60670020
Reach speed window	60F90A20	63A0	RWSL	Integer32	inc/16s	178956	The error window when the actual speed reaches the target speed or trapezoidal speed, and determines the reach speed signal together with 0x60F91C20
Zero speed output speed window	20101810	0980	RWSL	Unsigned16	inc/ms	3.00	Error window when actual speed is 0
Zero speed output time	60F91410	6440	RWSL	Unsigned16	ms	10.00	Zero-speed output speed window 0x20101810 After reaching the set range, it takes a period of time to output the zero-speed signal, and the time is determined by the zero-speed output time
Positive setting of soft limit	607D0120	4410	RWSL	Integer32	DEC	0	Soft limit positive setting
Soft limit negative setting	607D0220	4420	RWSL	Integer32	DEC	0	Soft limit negative setting
Limit function definition	20101908	0990	RWSL	Unsigned8	DEC	1	Used to set the action after the limit is reached 0: If there is a limit after finding the origin, it will alarm 1: do nothing

7.6Homing control (0x6098)

Name	CANopen	Modbus	Command Properties	Data type	Unit	Initial value	Explanation
Homing mode	60980008	4D00	RWSLM	Integer8	DEC	0	Homing function Refer origin control chapter
Origin turning signal speed	60990120	5010	RWSLTM	Unsigned32	rpm	300.00	After touching the trigger event, the speed of homing process (rpm)
Origin signal speed	60990220	5020	RWSLTM	Unsigned32	rpm	100.00	Speed when starting to find the origin
Homing acceleration	609A0020	5200	RWSL	Unsigned32	rps/s	50.00	Acceleration when homing process unit: rps/s
Origin offset	607C0020	4100	RWSLTM	Integer32	inc	0	Offset value after homing unit: inc
Origin Offset Mode	60990508	5050	RWSL	Unsigned8	DEC	0	Origin Offset Mode Control 0: run to the origin offset position, the actual position is displayed as 0 1: Run to the event trigger point, after the end the actual position will become: - Origin offset

7.7 Speed loop parameter (0x60F9)

Name	CANopen	Modbus	Command Properties	Data type	Unit	Initial value	Explanation
Kvp	60F90110	6310	RWSL	Unsigned16	DEC	4	The larger the value, the stronger the gain, but it may cause the motor howling
Kvi	60F90210	6320	RWSL	Unsigned16	DEC	0	The larger the value, the stronger the gain, but it may cause the motor howling
Kvi/32	60F90710	6370	RWSL	Unsigned16	DEC	2	Kvi's 1/32
Output filter	60F90508	6350	RWSL	Unsigned8	Hz	240	velocity output filter of velocity loop BW=Speed_Fb_N*20+100[Hz]

7.8 Position loop parameter (0x60FB)

Name	CANopen	Modbus	Command Properties	Data type	Unit	Initial value	Explanation
kpp 0	60FB 0110	6810	RWSL	Integer16	Hz	10.00	Scale value of the position loop
kvff	60FB0210	6820	RWSL	Integer16	%	100.00	Position loop speed feedforward
kaff	60FB0310	6830	RWSL	Integer16	DEC	32767	Acceleration feedforward for position loop
Smoothing filter	60FB0510	6850	RWSL	Unsigned16	DEC	1	Modify in the disabled state

7.9 Input/output port parameter（0x2010）

Name	CANopen	Modbus	Command Properties	Data type	Unit	Initial value	Explanation
Digital input 1	20100310	0830	RWSL	Unsigned16	HEX	0000	Refer to the function definition below
Digital input 2	20100410	0840	RWSL	Unsigned16	HEX	0000	
Digital input 3	20100510	0850	RWSL	Unsigned16	HEX	0000	
Digital input 4	20100610	0860	RWSL	Unsigned16	HEX	0000	
Digital output 1	20100F10	08F0	RWSL	Unsigned16	HEX	0001	
Digital output 2	20101010	0900	RWSL	Unsigned16	HEX	0002	
Input port status	20100A10	08A0	RLTM	Unsigned16	HEX	0000	bit0：Din1 bit1：Din2 bit2：Din3 bit3：Din4
Output port status	20101410	0940	RLTM	Unsigned16	HEX	000A	bit0：Dout1 bit1：Dout2
Change the input signal polarity definition	20100110	0810	RWSL	Unsigned16	HEX	FFFF	0：Turn off；1：Turn on bit0：Din1 bit1：Din2 bit2：Din3 bit3：Din4 bit4：Din5 bit5：Din6 bit6：Din7 bit7：Din8 Default 0xFF
Polarity definition of output port	20100D10	08D0	RWSLTM	Unsigned16	HEX	FFFF	Polarity definition of output port
Input port signal simulation	20100210	0820	RWL	Unsigned16	HEX	0000	bit0：Din1 bit1：Din2 bit2：Din3 bit3：Din4 bit4：Din5 bit5：Din6 bit6：Din7 bit7：Din8
Output port signal simulation	20100E10	08E0	RWLM	Unsigned16	HEX	0000	bit0：Dout1 bit1：Dout2 bit2：Dout3 bit3：Dout4 bit4：Dout5

Note

Definition of digital input function (hexadecimal)	Output port definition (hexadecimal)
0001: Enable 0002: Reset errors 0004: Operate mode control 0008: Kvi off 0010: Positive limit 0020: Negative limit 0040: Home signal 0080: Invert direction 0100: Din speed index 0 0200: Din speed index 1 0400: Din position index 0 0800: Din position index 1 1000: Quick stop 2000: Start homing 4000: Activate command 8001: Din speed index 2 8002: Din position index 2 8004:Multi-function input signal 0 (for setting multi-stage electronic gear ratio) 8008: Multi-function input signal 1 8010: Multi-function input signal 2 8020: Gain switching 0 8040: Gain switching 1 8080: Maximum current toggle input switch 8100: Motor error 8200：Pre-enable (The IO port must have an enable signal, otherwise it will alarm, which is used in some occasions where the machine needs to be determined before running the machine) 8400: Fast capture 1 8800: Fast capture 2	0001: Ready 0002: Error 0004: Motor position reached 0008: Motor zero speed 0010: Motor brake 0020: Motor speed reached 0040: Index signal appears 0080: Speed limit 0100: Driver enabled 0200: Position limit 0400: Home found 0800: Torque reached limit 1000: Multi-function signal 0 2000: Multifunction Signal 1 4000: Multifunction Signal 2 8001: STO active

The digital input function is described in the following table:

Input function	Description
Enable	Drive enable 1: Control word = Din Control word selection (2020.0F) 0:Control word = 0x06
Reset error	The reset error bit (bit7) in the control word = 1
Operating mode control	Working mode selection 1: Work mode = Work mode Select 1 (2020.0E). The default value is -4 0: Working mode = The working mode is set to 0 (2020.0D). The default value is -3
Kvi off	1: Turn off the speed loop integral gain 0: The set value of the speed loop integral gain is valid See Chapter 6 for more information
Positive limit	Normally closed positive/negative limit switch signal input 0: In the limit, the limit is activated and the corresponding direction of movement is prohibited
Negative limit	
Home signal	Origin switch signal can be used when finding the origin
Invert direction	In speed and torque mode, the speed command can be reversed
Din speed index 0	Din speed index in Din speed mode
Din speed index 1	
Din speed index 2	
Din position index 0	Din position index in Din location mode
Din position index1	
Din position index2	

Quick stop	Set control word bit bit2=0 to enable emergency stop. To re-enable after emergency stop, you need to first set the control word to 0x06 and then to 0x0F (if the input port is configured with drive enable, you only need to trigger the enable signal again).
Start homing	Start to find the origin signal, must be used with the driver enabled. When the origin is found, the working mode switches back to the working mode before the origin is found
Activate command	Activate position instructions, such as the control word from 0x2F to 0x3F
Multi-function input signal 0	Used to select the electronic gear ratio, the electronic gear molecule and the electronic gear denominator are determined by a BCD code composed of multifunctional inputs. The actual electronic gear ratio used is the electronic gear molecule [x], the electronic gear denominator [x], and x is the BCD code composed of multi-function input: Bit0: Multi-function input 0 Bit1: Multifunction input 1 Bit2: Multi-function input 2
Multi-function input signal1	
Multi-function input signal 2	
Gain switching input signal 0	The PI pointer (60F9.28) is determined by the BCD code consisting of gain switch 0 and gain switch 1, which also determines the index of Kvp, Kvi, and Kpp, as detailed in Section 6.2
Gain switching input signal1	
Motor error	If an external error occurs (for example, the motor itself is too hot), the error signal can be transmitted to the driver through the input port
Fast Capture 1	The fast capture function is used to capture the actual position (6063.00) data when the corresponding input signal edge arrives, with the fastest response time not exceeding 2ms. When the input function is configured as fast capture 1, if the rising edge of the input port comes, the rising edge capture state 1 will change to 1, and the actual position will be stored in the rising edge position 1. If the input falling edge arrives, the falling edge capture state 1 changes to 1, and the actual position is stored in falling edge position 1. Once rising edge capture state 1 or falling edge capture state 1 changes to 1, the user needs to reset them to 0 for the next capture, otherwise the next position will not be captured. Quick Capture 2 is used in a similar way to Quick Capture 1.
Fast Capture 2	
Pre-enable	For security reasons, a pre-enable signal can be used to represent whether the drive is ready, 1: indicates that the drive is ready and can be enabled. 0: indicates that the drive is not ready and cannot be enabled
Cear pulse	Clear gear front pulse data that has been received but not executed by the drive
Pause	1: The motor is suspended, bit8 = 1 in the control word 0: The motor continues to execute unfinished instructions
Positive trim	Position fine-tuning data in positive direction in active pulse mode
Negative trim	Position fine-tuning data in negative direction in active pulse mode

The digital output function is described in the following table:

Output function	Description
Ready	The drive is ready and can be enabled
Error	Driver failure alarm
Motor position reached	In position mode, when the difference between the actual position and the target position is less than the target position window (6067.00), and the duration is greater than or equal to the position window time (6068.00), the output position to the function is displayed
Motor zero speed	When the absolute value of the actual velocity -ms (60F9.1A) is less than or equal to the zero velocity window (2010.18), and the duration is greater than or equal to the zero velocity time (60F9.14), the zero velocity function is output
Motor brake	The motor brake control output signal can be used to connect an external relay that controls the motor lock. If the brake motor is used, this function must be set, otherwise it will damage the motor. An effective output of green indicates that the lock is opened, and an effective output of gray indicates that the lock is closed.
Motor speed reached	Output speed to function when the speed error (60F9.1C) is less than the speed to window (60F9.0A)
Index signal occurrence	Motor index signal appears
Speed limit reached	In torque mode, the actual speed reaches the maximum speed limit (607F.00)
Driver enabled	Drive is enabled. Motor locks shaft
Position limited	Positive-negative position limit medium
Home found	Home found
Torque reached limit	When the actual torque (60F5.08) reaches the baseline (60F5.06) and the duration exceeds the filtering time (60F5.07), the output torque reaches the limit. If the torque reaches the baseline (60F5.06) is set to 0, the torque reaches the limit detection is not enabled.
Multi-function signal 0	Din multi-segment position control for position-to-output functions is described in Chapter 5, Section 5.4.1.1
Multifunction signal 1	
Multifunction signal 2	

7.10 Parameter for storage (0x2FF0)

Name	CANopen	Modbus	Command Properties	Data type	Unit	Initial value	Explanation
Storage control parameters	2FF00108	2910	RWL	Unsigned 8	DEC	0	1: Store all configuration parameters set 10: Initialize all configuration parameters Note: The control loop parameters are stored, excluding motor parameters.
Store motor parameters set	2FF00308	2930	RWL	Unsigned 8	DEC	0	1：Store all motor parameters set

7.11 Error code（0x2601）

Name	CANopen	Modbus	Command Properties	Data type	Unit	Initial value	Explanation
Error state	26010010	1F00	RLTM	Unsigned16	HEX	0408	Real-time alarm error status bit 0: Extended Error bit 1：Encoder ABZ/not connected bit 2：Encoder UVW/ Encoder internal bit 3：Encoder Counting/Encoder CRC bit 4: Driver temperature bit 5：Over voltage bit 6：Under voltage bit 7：Over current bit 8：Chop Resistor bit 9：Position Following bit 10：Low logic voltage bit 11：Motor or Driver Ilt bit 12：Over frequency bit13：Motor temperature bit 14：Motor commutation bit 15：EEPROM data
Error state 2	260200	2000	RLTM	Unsigned16	HEX	0000	Error state 2 bit 0: Current Sensor bit 1: Watch dog bit 2: Wrong interrupt bit 3: MCU ID bit 4: Motor configuration Bits 5 to 7: reserved bit 8: External enable bit 9: Positive limit bit 10: Negative limit bit 11: SPI internal bit 12: Abort connection bit 13: Closed loop direction bit 14: Master ABZ bit 15: Master counting

7.12 Stop mode

Name	CANopen	Modbus	Command Properties	Data type	Unit	Initial value	Explanation
Quick stop mode	605A0010	3400	RWSL	Integer16	DEC	0	Encountered limit switch, emergency stop switch, or control word is 0x000B 0: stop without control 1: stop by using ramp, then switch off 2: stop by using quick stop deceleration, then switch off 5: stop with profile deceleration, stay in quick stop active

							6: stop with quick stop deceleration, stay in quick stop active 18: using motor winding for brake even encoder is wrong
Shutdown mode	605B0010	3410	RWSL	Integer16	DEC	0	Shutdown stop mode (Drive enable cancel) 0: stop without control 1: stop by using ramp, then switch off 2: stop by using quick stop deceleration, then switch off 18: using motor winding for brake even encoder is wrong
Disable stop mode	605C0010	3420	RWSL	Integer16	DEC	0	0: stop without control 1: stop by using ramp, then switch off 2: stop by using quick stop deceleration, then switch off 18: using motor winding for brake even encoder is wrong
Pause mode	605D0010	3430	RWSL	Integer16	DEC	1	Control word bit8 is set to 1 The motor is paused and enabled 1: stop by current ramp 2: stop by quick stop deceleration
Error stop mode	605E0010	3440	RWSL	Integer16	DEC	0	0: stop without control 1: stop by using ramp, then switch off 2: stop by using quick stop deceleration, then switch off 18: using motor winding for brake even encoder is wrong
Trapezoidal deceleration	60840020	4C00	RWSLTM	Unsigned32	rps/s	100.00	Working Mode Deceleration in modes 1 and 3
Quick stop deceleration	60850020	3300	RWSL	Unsigned32	rps/s	610.00	Deceleration for quick stop

7.13 Alarm parameter

Name	CANopen	Modbus	Command Properties	Data type	Unit	Initial value	Explanation
Temp_Motor_Ref	64101810	7180	RWSL	Integer16	℃	100	The default alarm point for the temperature is 100 ° C
Temp_Motor	64101910	7190	RLT	Integer16	℃	-	When the motor is not connected to the temperature sensor or the temperature sensor is abnormal, the motor temperature will be displayed at -40℃
Voltage_Under	65100710	8670	RWHP	Unsigned16	V	18	Drive low voltage alarm point
Chop_Voltage	65100810	8680	RWHP	Unsigned 16	V	63	Driver chopper voltage point
Voltage_Over	65100910	8690	RWHP	Unsigned 16	V	70	Drive overvoltage alarm point

Note

The iWMC comes with a temperature sensor by default

Chapter 8 RS485 Communication

8.1 RS485 cable connection

iWMC series servo wheel RS485 port supports the 232 protocol and Modbus protocol, which can be used to modify the internal parameters of the servo and monitor the servo status. The default baud rate of iWMC 485 is 38400 and the default protocol is 232. Figure 8-1 shows the connection diagram.

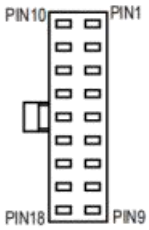

PIN	Definition
5&6	RS485A
14&15	RS485B

Figure 8-1 RS485 ports of the iWMC

Note

1. The device station ID and baud rate take effect only after the drive is restarted.
2. When the communication is unstable when connecting the host computer with the baud rate, reduce the communication baud rate and reconnect the software for debugging.
3. The driver has added the function of switching the 232 protocol through modbus, the internal address is 6510 0C, and the corresponding modbus address is mapped to 0X86C0, when the 485 interface uses the Modbus protocol, it can be immediately switched to the 232 protocol by sending the command (Take ID = 1 as an example): 01 06 86 C0 00 01 61 7E can be switched to the host computer immediately, or you can send 01 06 86 C0 00 03 E0 BF (232 protocol, effective after saving and restarting) 01 06 29 10 00 01 41 93 (store control parameters), and then restart the machine to connect with the host computer.
4. If the iWMC fail to connect to the host computer using the RS485 communication protocol, it may be caused by MODBUS being selected as the communication protocol. You can send MODBUS instructions according to the third point above to replace the MODBUS protocol with 232 protocol and then reconnect to the host computer.

8.2 RS485 communication parameters list

Internal address	Name	Meaning	Default
100B0010	Device station number	Driver station number	1
2FE20010	RS485 baud rate	Set the baud rate of the RS485 port (Modbus address: 0X2600) Set value Baud rate 1080————9600 540————19200 270————38400 90————115200 Note: Need to save and restart.	270

65100C08	RS485 Communication protocol selection	bit0:0: Using MODBUS protocol 1: using RS232 communication protocol bit1:0: Changes to bit0 take effect immediately. 1: Changes to bit0 take effect after the storage restarts	1
65100E10	RS485 mode	Data bit =8, stop bit =1, no parity check	Fixed value
65100B08	RS232 class communication	RS232 level communication control (Modbus address: 0X86B0) 0:1 to 1 communication 1: Cascade communication	0

8.3 MODBUS RTU protocol

iWMC servo wheel support the MODBUS RTU communication protocol, and their internal objects are discontinuous 16-bit data registers (mapped to 4X when read and written by the upper computer). The format of the message is as follows:

Target station	Function code	Data	CRC check code
1 Byte	1 Byte	N Byte	2 Byte

8.3.1 Modbus common function codes introduction

Function code 0x03: Read data register

Request format:

Target station	Function code	Modbus address		Read byte		CRC
		High Byte	Low byte	High Byte	Low byte	
1 Byte	03	1 Byte	1 Byte	1 Byte	1 Byte	2 Byte

Correct response：

Target station	Function code	Return bytes	Register data		.....	CRC
			High Byte	Low byte		
1 Byte	03	1 Byte	1 Byte	1 Byte	……	2 Byte

Note

If a response error such as the address does not exist, the returned function code is 0x81

Function code 0x06: Write single data register

Request format：

Target station	Function code	Modbus address		revise content		CRC
		High Byte	Low byte	High Byte	Low byte	
1 Byte	06	1 Byte	1 Byte	1 Byte	1 Byte	2 Byte

Response format: If the setting is successful, the original text will be returned.

Note

If the written data is out of range, the address does not exist, and the response to read-only data operations is wrong, the returned function code is 0x86.

Function code 0x10: Write multi-holding register

Request format:

Target station	Function code	Modbus address	Data length（word）		Number of bytes of data written（byte）	Low level data		High level data		CRC
			High Byte	Low byte		High Byte	Low byte	High Byte	Low byte	
1 Byte	10	2Byte	1Byte	1Byte	1Byte	1Byte	1Byte	1Byte	1Byte	2Byte

Correct response:

Target station	Function code	Modbus address	Data length（word）		CRC
			High Byte	Low byte	
1 Byte	10	2Byte	1Byte	1Byte	2Byte

Note

If the written data is out of range, the address does not exist, or the response to read-only data operations is incorrect, the returned function code is 0x90.

Example: Send packet 01 10 6F 00 00 02 04 55 55 00 08 1A 47

Message meaning:

01——ID number

10——Function code, write multiple WORD

6F 00——The modbus address of the servo writable object "target speed" 60FF0020, the data length is 2 WORD;

00 02——write 2 WORD

04——Data length is 4 Byte（2 WORD);

55 55 00 08——Write data in hexadecimal 00085555, decimal 546133, converted to 30RPM;

1A 47——Check code

8.3.2 Modbus packet Example

When using Kincoservo 3 software, there are two ways to obtain Modbus address information:

1. Click **Help** → **Object Dictionary** on the menu bar. The current Modbus address will be displayed in the help box to the right of the corresponding variable name.

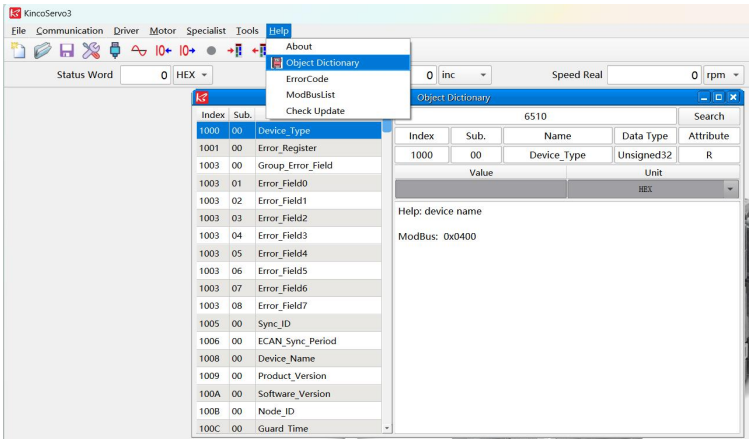

Figure 8－2 Object dictionary interface

2.Click **Help** → **Modbus List** on the menu bar. the complete Modbus address information of all parameters will be displayed.

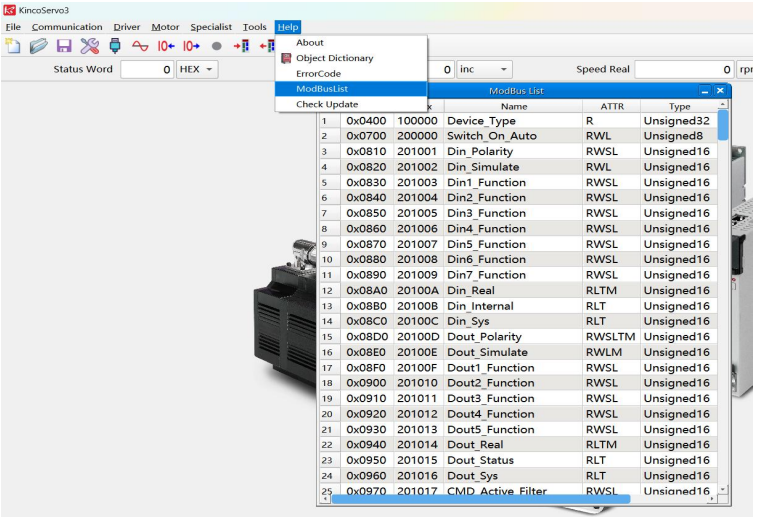

Figure 8－3 ModbusList interface

The following is an example of sending packets in different modes. The station number is 1.

Table 8－1 Message format

Internal address	Modbus address	Name	Note	Message（ID=1）
60600008	3500	Operate mode	Operate mode is 3	01 06 35 00 00 03 C6 07
60FF0020	6F00	Target speed	Speed 150RPM	01 10 6F 00 00 02 04 F5 C3 00 28 D9 B3
60400010	3100	Control word	Enable to write F	01 06 31 00 00 0F C7 32
60410010	3200	Statu word	Read drive status	01 03 32 00 00 02 CA B3
Homing control mode (control word first F then 1F)				
Internal address	Modbus address	Name	Value	Message（ID=1）
60400010	3100	Control word	F	01 06 31 00 00 0F C7 32
60600008	3500	Operate mode	6	01 06 35 00 00 06 06 04
60980008	4D00	Homing mode	33	01 06 4D 00 00 21 5E BE
60990120	5010	Homing transition signal speed	200RPM	01 10 50 10 00 02 04 9D 03 00 36 57 98
60990220	5020	Homing signal speed	150RPM	01 10 50 20 00 02 04 F5 C3 00 28 CE 5A
60400010	3100	Control word	1F	01 06 31 00 00 1F C6 FE
01 03 32 00 00 02 CA B3 Read the status word. C037 indicates that the origin is found (bit15 set to 1)				
Position control mode (control word absolute positioning first 2F then 3F relative positioning first 4F then 5F, 103F update immediately)				
Internal address	Modbus address	Name	Value	Message（ID=1）
60400010	3100	Control word	F	01 06 31 00 00 0F C7 32
60600008	3500	Operate mode	1	01 06 35 00 00 01 47 C6
607A0020	4000	Target position	50000inc	01 10 40 00 00 02 04 C3 50 00 00 FE 39
60810020	4A00	Trapezoid speed	30RPM	01 10 4A 00 00 02 04 55 55 00 08 BC D6
60830020	4B00	Trapezoidal acceleration	610.352rps/s	Use default value
60840020	4C00	Trapezoidal deceleration	610.352rps/s	Use default value
60400010	3100	Control word	2F	01 06 31 00 00 2F C6 EA
		Variable name	3F(Absolute positioning)	01 06 31 00 00 3F C7 26
		Control word	4F	01 06 31 00 00 4F C6 C2
		Operate mode	5F(Relative positioning)	01 06 31 00 00 5F C7 0E
01 03 32 00 00 02 CA B3 Reads the status word. D437 indicates the location recah(bit10 set to 1)				

Speed control mode				
Internal address	Modbus address	Name	Value	Message（ID=1）
60600008	3500	Operate mode	3	01 06 35 00 00 03 C6 07
60FF0020	6F00	Target position	30RPM	01 10 6F 00 00 02 04 55 55 00 08 1A 47
60400010	3100	Control word	F	01 06 31 00 00 0F C7 32
60830020	4B00	Trapezoidal acceleration	610.352rps/s	Use default value
60840020	4C00	Trapezoidal deceleration	610.352rps/s	Use default value

Note

In communication mode, data is transmitted in hexadecimal format.

Table 8－2 Unit conversion relation

Name	Engineering unit	Internal unit	Conversion relation
Speed	rpm	DEC	DEC=[(RPM*512*Encoder resolution)/1875]
Acceleration	r/s2	DEC	DEC=[(R/S2*65536*Encoder resolution)/4000000]
Current	A	DEC	1Arms=[2048/(Ipeak/1.414)]DEC
Note: The encoder resolution is 65536			

8.4 RS232 communication protocol

8.4.1 RS232 transport protocol

iWMC RS-232C communication strictly follow the master/slave station protocol, the host computer can send any data to the driver. The drive is set to an address that calculates this data and replies with a return value.

The transport protocol used by RS232 uses a fixed ten-byte packet format:

Byte 0	Byte 1	Byte 2	Byte 3	Byte 4	Byte 5	Byte 6	Byte 7	Byte 8	Byte 9
Driver ID	Data								CHKS

Host send：

Byte 0	Byte 1	Byte 2	Byte 3	Byte 4	Byte 5	Byte 6	Byte 7	Byte 8	Byte 9
Driver ID	Host send data								CHKS

Servo send/host receive:

Byte 0	Byte 1	Byte 2	Byte 3	Byte 4	Byte 5	Byte 6	Byte 7	Byte 8	Byte 9
Driver ID	Host received data								CHKS

Key points:

The calculation process of the check code CHKS takes 01 40 F0 2F 09 00 00 00 00 97 (this command is to read the target speed of the slave station 2FF00910) as an example,the last 0x97 is the check code, which is calculated by LRC check (vertical redundancy check).

Here recommend a check code online computing website: http://www.ip33.com/lrc.html

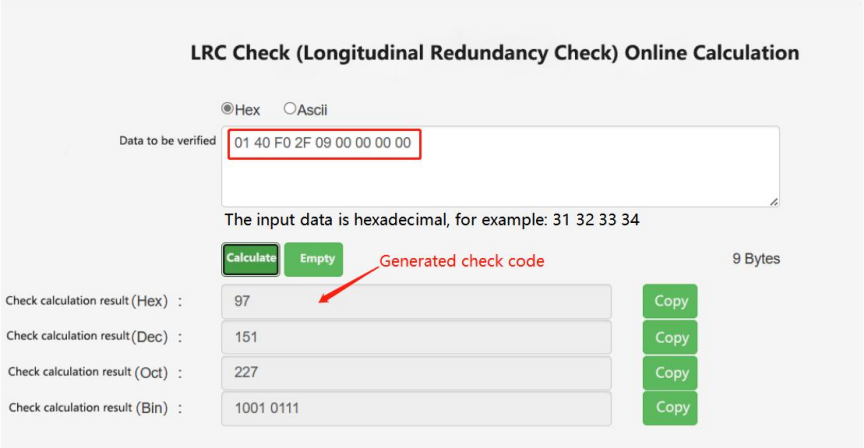

Note

- There is a separate CHKS for every ten bytes
- If the host sends the server drive an address that does not exist on the network, the server drive will not respond.
- When the host sends a correct data, the slave station will look for the corresponding address of the slave station data and check the parity value, if the parity value does not match, the slave station will not respond.

8.4.2 RS232 data protocol

The data protocol is different from the transmission protocol, and its content refers to the 8 data bytes of the above 10 bytes above. iWMC servo wheel internal data definition is compliant with Canopen international standards. Numerical and functions are expressed through indexes and sub -indexes.

A：Downloading（From master to slave)

Download means that the master sends a command to write a value to the slave object. If downloaded to a non-existent object, the master will generate an error.

Master station sends data format

Byte 0	Byte 1	Byte 2	Byte 3	Byte 4	Byte 5	Byte 6	Byte 7
Function code	Index		Subindex	Data			

Function code： Specifies the direction and size of the data transfer

23(0x16)： Send 4 bytes of data (bytes 4... 7 Contains 32 bits)

2B(0x16)： Send 2 bytes of data (bytes 4... 5 Contains 16 bits)

2F(0x16)： Send 1 byte of data (bytes 4 contains 8 bits)

Index： The address of the sending object, 16 bits

Subindex： Subaddress of the sending object, 8 bits

Data： The data to be sent (the order of the four bytes in the data is high byte after, low byte before)

For example：

Write 600rpm to the "target speed" of the slave station, the internal unit of 2FF0.09 is rpm, 600 is decimal, and the hexadecimal representation is 258. Since the length of the object to be written is 4 bytes, but the result is only two bytes, it should be filled with 0 at the high level, so the final result =00 00 02 58, the byte order sent is 58 02 00 00

Slave response data format

Byte 0	Byte 1	Byte 2	Byte 3	Byte 4	Byte 5	Byte 6	Byte 7
Function code	Index		Subindex	Reserve			

Function code： Specifies the direction and size of the data transfer

60(0x16)： Data sent successfully

80(0x16)： Error, by byte 4... 7 generation

Index： The address of the sending object, 16 bits,Same as the main station

Subindex： Subaddress of the sending object, 8 bits,Same as the main station

Reserve： Reserved

B：Upload（From slave to master）

Upload means that the master sends a command to read the address of the slave object. Uploading an address that does not exist will result in an error for the master.

Function code： Define the direction of the data transfer

40(0x16) ： Read data

Index： The address of the sending object, 16 bits

Subindex： Subaddress of the sending object, 8 bits

Reserve： Byte 4... 7 no use

Slave receive data

Byte 0	Byte 1	Byte 2	Byte 3	Byte 4	Byte 5	Byte 6	Byte 7
Function code	Index		Subindex	Data			

Function code： Display slave response

43(0x16)： Bytes 4... 7 contains 32 bits

4B(0x16)： Bytes 4... 5 contains16 bits

4F(0x16)： Bytes 4contains 8 bits

80(0x16)： Error, by byte 4... 7 generation

Index： The address of the sending object, 16 bits,Same as the main station

Subindex： Subaddress of the sending object, 8 bits,Same as the main station

Data： Data returned from the slave station

If there is no error in the data, byte 4... 7 saves the value of the slave object, low byte in front, high byte in back.

If there is an error in the data, the four bytes of data are not equal to the value of the slave object.

For example：

The master sends an "upload" command to the slave:

01 40 F0 2F 09 00 00 00 00 97（This command is to read the target speed of the slave station 2FF00910）

Slave station response:

01 4B F0 2F 09 58 02 00 00 32

Description:

01: The slave station number is 1

4B: 2 bytes are received, saved by byte4 and byte5 in the 10 bytes of the response

F0 2F: The object index address is 2FF0

09: The address of the object subindex is 09

58 02 00 00: The value is 00 00 02 58(hex)= 600 rpm

Table 8-3 Setting homing mode, position mode, and speed mode through RS232 communication

Homing mode				
Parameter address	Name	Value	Message(ID=1)	Note
60400010	Control word	F	Send→01 2B 40 60 00 0F 00 00 00 25 Receive←01 60 40 60 00 0F 00 00 00 F0	Home turning signal speed and Homing signal velocity are expressed in decimal DEC by default DEC=[(RPM*512*[641003])/1875]
60600008	Operating mode	6	Send→01 2F 60 60 00 06 00 00 00 0A Receive←01 60 60 60 00 06 00 00 00 D9	
60980008	Homing mode	33	Send→01 2F 98 60 00 21 00 00 00 B7 Receive←01 60 98 60 00 21 00 00 00 86	
60990120	Home turning signal speed	200RPM	Send→01 23 99 60 01 03 9D 36 00 0C Receive←01 60 99 60 01 03 9D 36 00 CF	
60990220	Homing signal velocity	100RPM	Send→01 23 99 60 02 82 4E 1B 00 F6 Receive←01 60 99 60 02 82 4E 1B 00 B9	
60400010	Controlword	1F	Send→01 2B 40 60 00 1F 00 00 00 15 Receive←01 60 40 60 00 1F 00 00 00 E0	
Send 01 40 41 60 00 00 00 00 00 1E read status word，Drive response 01 4B 41 60 00 31 C0 FF FF 24，bit15=1 indicates homing found				

Position mode				
Parameter address	Name	Value	Message(ID=1)	Note
60400010	Control word	2F	Send→01 2B 40 60 00 2F 00 00 00 05 Receive←01 60 40 60 00 2F 00 00 00 D0	The trapezoidal speed is expressed in decimal DEC by default DEC=[(RPM*512*[641003])/1875]
		4F	Send→01 2B 40 60 00 4F 00 00 00 E5 Receive←01 60 40 60 00 4F 00 00 00 B0	
60600008	Operating mode	1	Send→01 2F 60 60 00 01 00 00 00 0F Receive←01 60 60 60 00 01 00 00 00 DE	
607A0020	Target position	50000inc	Send→01 23 7A 60 00 50 C3 00 00 EF Receive←01 60 7A 60 00 50 C3 00 00 B2	
60810020	Trapezoidal speed	200RPM	Send→01 23 81 60 00 03 9D 36 00 25 Receive←01 60 81 60 00 03 9D 36 00 E8	
60830020	Trapezoidal acceleration	100rps/s	Send→01 23 83 60 00 6E A3 01 00 E7 Receive←01 60 83 60 00 6E A3 01 00 AA	Trapezoidal acceleration and trapezoidal deceleration are expressed in decimal DEC by default. DEC=[(RPS/S*65536*[641003])/4000000] 2F→3F: absolute location 4F→5F: relative location
60840020	Trapezoidal deceleration	100rps/s	Send→01 23 84 60 00 6E A3 01 00 E6 Receive←01 60 84 60 00 6E A3 01 00 A9	
60400010	Controlword	3F	Send→01 2B 40 60 00 3F 00 00 00 F5 Receive←01 60 40 60 00 3F 00 00 00 C0	
		5F	Send→01 2B 40 60 00 5F 00 00 00 D5	

			Receive←01 60 40 60 00 5F 00 00 00 A0	
Send 01 40 41 60 00 00 00 00 00 1E read the status word,Drive response 01 4B 41 60 00 37 C4 FF FF 1A,bit10 representsTarget_reached				
Speed mode				
Parameter address	Name	Value	Message(ID=1)	Note
60600008	Operation mode	3	Send→01 2F 60 60 00 03 00 00 00 0D Receive←01 60 60 60 00 03 00 00 00 DC	The target speed is expressed in decimal DEC by default DEC=[(RPM*512*[641003])/1875] Trapezoidal acceleration and trapezoidal deceleration are expressed in decimal DEC by default: DEC=[(RPS/S*65536*[641003])/ 4000000]
60FF0020	Target speed	-100RPM	Send→01 23 FF 60 00 7E B1 E4 FF 6B Receive←01 60 FF 60 00 7E B1 E4 FF 2E	
60400010	Control word	2F	Send→01 2B 40 60 00 2F 00 00 00 05 Receive←01 60 40 60 00 2F 00 00 00 D0	
60830020	Trapezoidal acceleration	100rps/s	Send→01 23 83 60 00 6E A3 01 00 E7 Receive←01 60 83 60 00 6E A3 01 00 AA	
60840020	Trapezoidal deceleration	100rps/s	Send→01 23 84 60 00 6E A3 01 00 E6 Receive←01 60 84 60 00 6E A3 01 00 A9	
Note: The message is expressed in hexadecimal, and the motor resolution used in this case is 65536				

8.5 Troubleshooting Measures for Communication Faults

When the driver cannot communicate with the host computer, please check the driver communication parameters and wiring; When the drive is prone to disconnection, read-only no write or only write no read and other problems, you can check through the following aspects:

Serial number	Check item	Description
1	Terminal resistance	When the 485 communication rate is high and the communication distance is long, the signal will be reflected at the end of the transmission line, so it is necessary to parallel a 120Ω terminal resistor at the beginning and end of the communication network. Since the FD servo drive has its own terminal resistance, it is only necessary to dial the dip switch of the first and last drive to the ON position.
2	Cable specification	The recommended wire diameter of 485 signal cable is 24AWG, and the shielded twisted pair cable should be used, and the shielding layer of the cable should be grounded together and the grounding resistance should not be greater than 1Ω. The use of twisted pair cables can effectively eliminate adversarial interference, and the cable with a good shielding layer can effectively reduce the impact of external interference sources.
3	Reasonable wiring	The distance between communication cables and strong-current cables should be at least 20cm. If the cables can be folded into metal pipes, the anti-interference capability is better. During the wiring process, the signal line and the power line intersect vertically, and parallel laying should be avoided as far as possible.
4	Good grounding	The motor power line must be a cable with a shielded network, the motor PE must be connected to the driver ground terminal, and the driver shell must be well grounded.
5	Power interference	Power interference. The instability of the power supply of the grid will also directly affect the normal use of the servo, and the external circuit of the driver can be connected by referring to Chapter 3.

Chapter 9 CANopen Communication

9.1 CANopen communication protocol introduction

CANopen is the most famous and successful of the open fieldbus standards, which has been widely recognized and widely used in Europe and the United States. In 1992, the Association of Automation CAN Users and Manufacturers (CiA) was established in Germany and began to develop CANopen, an application layer protocol for automation CAN. Since then, the members of the Association have developed a series of CANopen products, which are widely used in machinery manufacturing, pharmaceuticals, food processing and other fields.

iWMC servo wheel is standard CAN slave devices that strictly follow the CANOpen 2.0A/B protocol and can communicate with any host computer that supports the protocol. The FD1X5 and iSMK servos use a strictly defined list of objects, which we call the Object Dictionary. This object dictionary is designed based on the CANopen international standard, and all objects have clear functional definitions. The Objects mentioned here are similar to the memory address we often say, some objects such as speed and position can be modified by the external controller, and some objects can only be modified by the drive itself, such as status and error messages. These objects are hexadecimal numbers. For example, the CANopen address in working mode is 0x60400010, as shown in Table 9-1.

Table 9-1 The example object dictionaries lists

Complete CANopen address composition			property	Meaning
Index	Subindex	Bits(Data length)		
0x6040	00	0x10	RW	Device status control word
0x6060	00	0x08	RW	operate mode
0x607A	00	0x20	W	Target position
0x6041	00	0x10	MW	Device status word

The properties of an object are as follows:

1. RW(Read and write) : Objects can be read or written;
2. RO(read-only) : The object can only be read;
3. WO (Write only) : Write only;
4. M (Mappable) : Objects can be mapped, similar to indirect addressing;
5. S (Storable) : Objects can be stored in the Flash-ROM area and are not lost when powered off.

9.2 Hardware Description

iWMC servo wheel CANopen port hardware definition is as follows:

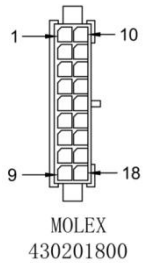

PIN	Definition
3&4	CAN_H
12&13	CAN_L

Figure 9-1 CANopen Definition

CAN communication protocol mainly describes the mode of information transmission between devices. The definition of CAN layer is consistent with the open system interconnection model (OSI). Each layer communicates with the same layer on another device. The actual communication occurs in the two adjacent layers of each device, and the devices are only interconnected through the physical medium of the physical layer of the model. The specification of CAN defines the bottom two layers of the model, the data link layer and the physical layer. CAN bus physical layer is not strictly stipulated, can use a variety of physical media such as twisted pair optical fiber, etc., the most commonly used is twisted pair signal, the use of differential voltage transmission (commonly used bus transceiver), two signal lines are called CAN_H and CAN_L, static time is about 2.5V, at this time the state is expressed as logic 1, can also be called hidden bit, CAN_H is higher than CAN_L to represent logical 0, which is called display, and the usual voltage value at this time is CAN_H=3.5V and CAN_L=1.5V, and display is preferred in competition. Figure 9-1 show the names and functions of CAN communication port pins.

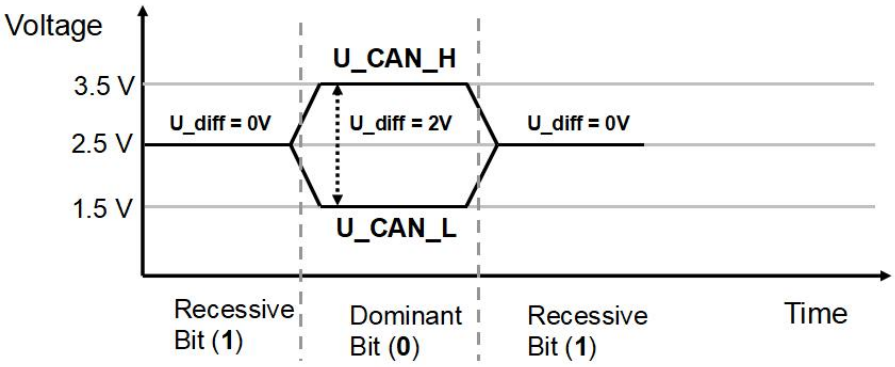

Figure 9-2 CAN Signal Identification

Note:

1.All CAN_L and CAN_H pins of the slave station can be directly connected and connected by series connection.

2.Connect the master terminal and the last slave terminal to a terminal resistor of 120 Ω. The FD1X5 drive comes with a terminal resistance dip switch SW4, which is set to ON to enable the terminal resistance. Restart the drive after changing the terminal resistance dip status; iSMK do not contain internal terminal resistors, so it need to be connected externally.

3.Use shielded twisted pair cables for communication cables and ground them properly. (The 3-pin ground cable can be disconnected for short-distance communication, but it is recommended to ground the 3-pin for long-distance, high-baud communication.)

4.Table 9-2 lists the theoretical maximum communication distances of different baud rates.

Table 9-2 The longest distance table that can theoretically communicate with each baud rate

Communication speed (bit/s)	Communication distance (M)
1M	25
800K	50
500K	100
250K	250
125K	500
50K	600
25K	800
10K	1000

9.3 Software Description

9.3.1 EDS description

EDS (electronic data form) file is the identification file or similar code of the slave station connected to the PLC, through which to identify the type of slave station (which is similar in 401, 402, 403, or which device belongs to 402). This file contains all the information of the slave station, such as manufacturer, serial number, software version, supported baud rate type, OD that can be mapped and the attributes of each OD and so on, similar to the GSD file of Profibus. Therefore, before hardware configuration, we first need to import the EDS file from the station to the upper configuration software.

9.3.2 SDO Description

SDO is mainly used to transmit low-priority objects between devices. Typically, it is used to configure and manage slave devices, such as modifying PID parameters and PDO configuration parameters of current ring, speed ring, position ring, etc. This kind of data transmission is the same as MODBUS, that is, after the master station sends out, the slave station needs to return data response. This communication mode is only suitable for parameter setting, and is not suitable for data transmission with high real-time requirements.

The communication mode of SDO is divided into upload and download, and the host computer can read and write the OD inside the servo according to the special SDO read and write instructions. In the CANopen protocol, the content of the Object dictionary can be modified through the Service Data Object (SDO). The following describes the structure of the SDO command and the guidelines to follow.

The basic structure of SDO is as follows：Client→Server/Server→Client

Byte0	Byte1-2	Byte3	Byte4-7
SDO Command specifier	Object Index	Object subindex	Maximum 4 bytes of data

SDO command word contains the following information:

- Download/upload
- Request/response
- Segmented/expedited transfer
- CAN the frame data byte length, which is used to alternately clear and set the toggle bit for each subsequent segment

There are five request/reply protocols implemented in SDO:

- Initiate domain Download
- Download Domain Segment
- Initiate Domain Upload；
- Upload Domain Segment
- Abort Domain Transfer

Among them, Download refers to write operation of the object dictionary, Upload refers to read operation of the object dictionary; Use the Initiate Domain Upload protocol when reading parameters; When setting parameters, use the Initiate Domain Download protocol; The syntax of the protocol's SDO command word (the first byte of an SDO CAN message) is described in Table 8-4 and Table 8-5, where "-" indicates that it is irrelevant and should be 0.

Table 9-3 Start domain download

Bit	7	6	5	4	3	2	1	0
Client→	0	0	1	-	n		e	s
←Server	0	0	1	-	-	-	-	-

Table 9-4 Start domain upload

Bit	7	6	5	4	3	2	1	0
Client→	0	0	1	-	-	-	-	-
←Server	0	0	1	-	n		e	s

Description：

n——Indicates the number of bytes of meaningless data in the packet data [from (8-n) bytes to the seventh byte of meaningless data] (n is valid when e=1 and s=1, otherwise n is 0);

e——Normal transmission when e=0, accelerated transmission when e=1;

s——Indicates whether the data length is specified. 0 indicates that the data length is not specified, and 1 indicates that the data length is specified.

e=0， s=0——Retained by the CiA;

e=0， s=1——The data byte is the byte counter, byte4 is the low data part (LSB), byte7 is the high data part (MSB);

e=1——ata bytes are the data to be downloaded.

SDO message format description

The transmission of SDO is an object data transmission of no more than 4 bytes, and the message consists of a COB-ID and a data segment. The following table shows that the COB-ids of the sending SDO(RSD) and the receiving SDO do not agree.

Data segments are arranged in the "low position in front, high position in back" mode. All SDO message data segments must be eight bytes. The format of the SDO transmission message is shown in the following table.

Table 9-5 SDO transmit message format table

	COB-ID	DLC	Data							
			0	1	2	3	4	5	6	7
Master →	0x600+Node_ID	8	Send command word	Object Index		Object subindex	00			
← Slave	0x580+Node_ID	8	Receive command word	Object Index		Object subindex	Maximum 4 bytes of data			

The command code specifies the transmission type and data length of the SDO, the index and subindex are the objects to be transmitted, and the data is the numerical value of the object.

SDO read message

Depending on the length of the received data, the received SDO command word changes, and the message format is as follows:

Table 9-6 SDO reads message description

		COB-ID	DLC	Data							
				0	1	2	3	4	5	6	7
→ Master		0x600+Node_ID	8	40	Object index		Object subindex	-	-	-	-
← Slave	Normal	0x580+Node_ID	8	4F	Object index		Object subindex	Data	-	-	-
	Normal	0x580+Node_ID	8	4B	Object index		Object subindex	Data		-	-
	Normal	0x580+Node_ID	8	43	Object index		Object subindex	Data			
	Error	0x580+Node_ID	8	80	Object index		Object subindex	Error code			

The command word sent by the SDO message is 0x40 when the parameter is read. The command word received will be different depending on the length of the message data returned by the driver.

Note

"-" indicates that data exists but is not considered. You are advised to write 0 when writing data.

SDO write message

Using SDO to modify parameters for objects no larger than 4 bytes, the transmission message varies according to the read and write mode and the inconsistency of the content data length. SDO write messages as shown in the following table:

Table 9-7 SDO write message description

		COB-ID	DLC	Data							
				0	1	2	3	4	5	6	7
→ Master		0x600+Node_ID	8	2F	Object index		Object subindex	Data	-	-	-
		0x600+Node_ID	8	2B	Object index		Object subindex	Data		-	-
		0x600+Node_ID	8	23	Object index		Object subindex	Data			
← Slave	Normal	0x580+Node_ID	8	60	Object index		Object subindex	-	-	-	-
	Error	0x580+Node_ID	8	80	Object index		Object subindex	Error code			

When writing parameters, the command word is related to the data length of the object when the SDO message is sent. If the data to be sent is 1 byte, the command word is 0x2F. If the data to be sent is 2 bytes, the command word is 0x2B. If the data to be sent is 4 bytes, the command word is 0x23. The SDO message is successfully sent, and the received command word is 0x60. The SDO message failed to be sent with the received command word 0x80.

Example:

The slave station number is 1, the SDO is used to write the object to the target position 607A.00, and the write value is 100000, that is, 0x186A0. The master station sends a message as shown in the following table. (All in hexadecimal)

Master send SDO message

COB-ID	DLC	Data							
		0	1	2	3	4	5	6	7
0x601	8	23	7A	60	00	A0	86	01	00

Write normal drive receives SDO message

COB-ID	DLC	Data							
		0	1	2	3	4	5	6	7
0x601	8	60	7A	60	00	A0	86	01	00

If the write is abnormal, the error command word 0x80 is returned

COB-ID	DLC	Data							
		0	1	2	3	4	5	6	7
0x601	8	80	7A	60	00	01	00	01	06

Table 9-8 SDO message error code

Error code	Code function description
0x05040001	Invalid command, unknown or illegal Client/Server command word
0x06010001	Attempts to read only write object parameters
0x06010002	An attempt was made to write read-only object parameters
0x06020000	Invalid index. The object does not exist in the object dictionary
0x06040041	Cannot be mapped, object parameters do not support mapping to PDO
0x06060000	The drive is in an error state, causing the object parameter access failure
0x06070010	The data type and length of the service parameter do not match
0x06070012	The data type does not match, and the length of the service parameter is too large
0x06070013	The data type does not match, and the length of the service parameter is too short
0x06090011	Invalid subindex
0x06090030	Invalid data, out of range of object parameters

0x06090031	The value of the written data is too large
0x06090032	Write data value is too small
0x08000022	Data cannot be transferred or saved to the application due to the current device state

Table 9-9 Set the homing mode via SDO messages

Parameter address	Name	Value	message(ID=1)
60400010	Control word	F	Send→601 2B 40 60 00 0F 00 00 00 Receive←581 60 40 60 00 0F 00 00 00
60600008	Operate mode	6	Send→601 2F 60 60 00 06 00 00 00 Receive←581 60 60 60 00 06 00 00 00
60980008	Homing mode	33	Send→601 2F 98 60 00 21 00 00 00 Receive←581 60 98 60 00 21 00 00 00
60990120	Homing transition signal speed	200RPM	Send→601 23 99 60 01 03 9D 36 00 Receive←581 60 99 60 01 03 9D 36 00
60990220	Homing signal speed	100RPM	Send→601 23 99 60 02 82 4E 1B 00 Receive←581 60 99 60 02 82 4E 1B 00
60400010	Control word	1F	Send→601 2B 40 60 00 1F 00 00 00 Receive←581 60 40 60 00 1F 00 00 00
Send 601 40 41 60 00 00 00 00 00 00 Read the status word and the drive replies 581 4B 41 60 00 31 C0 FF FF, bit15=1 for origin found			

Table 9-10 Setting the position mode via SDO message

Parameter address	Name	Value	message(ID=1)
60400010	Control word	2F	Send→601 2B 40 60 00 2F 00 00 00 Receive←581 60 40 60 00 2F 00 00 00
		4F	Send→601 2B 40 60 00 4F 00 00 00 Receive←581 60 40 60 00 4F 00 00 00
60600008	Operate mode	1	Send→601 2F 60 60 00 01 00 00 00 Receive←581 60 60 60 00 01 00 00 00
607A0020	Target position	50000inc	Send→601 23 7A 60 00 50 C3 00 00 Receive←581 60 7A 60 00 50 C3 00 00
60810020	Trapezoidal speed	200RPM	Send→601 23 81 60 00 03 9D 36 00 Receive←581 60 81 60 00 03 9D 36 00
60830020	Trapezoidal acceleration	100rps/s	Send→601 23 83 60 00 6E A3 01 00 Receive←581 60 83 60 00 6E A3 01 00
60840020	Trapezoidal deceleration	100rps/s	Send→601 23 84 60 00 6E A3 01 00 Receive←581 60 84 60 00 6E A3 01 00
60400010	Control word	3F	Send→601 2B 40 60 00 3F 00 00 00 Receive←581 60 40 60 00 3F 00 00 00
		5F	Send→601 2B 40 60 00 5F 00 00 00 Receive←581 60 40 60 00 5F 00 00 00
Send 601 40 41 60 00 00 00 00 00 00 Read the status word and the drive replies 581 4B 41 60 00 37 C4 FF FF,bit10 representing the target location reach			

Table 9-11 Speed mode is set through SDO message

Parameter address	Name	Value	message(ID=1)
60600008	Operate mode	3	Send→601 2F 60 60 00 03 00 00 00 Receive←581 60 60 60 00 03 00 00 00
60FF0020	Target position	-100RPM	Send→601 23 FF 60 00 7E B1 E4 FF Receive←581 60 FF 60 00 7E B1 E4 FF
60400010	Control word	2F	Send→601 2B 40 60 00 2F 00 00 00 Receive←581 60 40 60 00 2F 00 00 00
60830020	Trapezoidal acceleration	100rps/s	Send→601 23 83 60 00 6E A3 01 00 Receive←581 60 83 60 00 6E A3 01 00
60840020	Trapezoidal deceleration	100rps/s	Send→601 23 84 60 00 6E A3 01 00 Receive←581 60 84 60 00 6E A3 01 00

Note: The message is expressed in hexadecimal, and the motor resolution used in this case is 65536

9.3.3 PDO Description

PDO can transmit 8 bytes of data at a time, with no other protocol presetting (meaning that the data content is predefined), and is mainly used to transmit data requiring high frequency exchange.

The transmission mode of PDO breaks the existing data question-and-answer transmission concept and adopts a new data exchange mode. The two sides of the device define the data receiving and sending area in each device before transmission, and directly send the relevant data to the data receiving area of the other side during data exchange, which reduces the question-and-answer inquiry time and greatly improves the efficiency of bus communication. As a result, high bus utilization is achieved.

9.3.3.1 PDO COB-ID Description

COB-ID is a unique method of CANopen Communication protocol. Its full name is Communication Object Identifier-Communication object-ID. These COB-ids define the corresponding transport levels for PDO. The controller and the servo can define the same transmission level and the transmission content in their respective software configurations, so that after the controller and the servo use the same transmission level and transmission content, the data transmission is transparent, that is, both sides know the data content to be transmitted. It is not necessary to reply whether the data is transmitted successfully when the data is transmitted.

The default ID allocation table is based on the 11-bit CAN-ID defined by CANopen 2.0A (CANopen 2.0B protocol COB-ID is 29 bits), which contains a 4-bit function code part and a 7-bit Node-ID part, as shown in Figure 9-3.

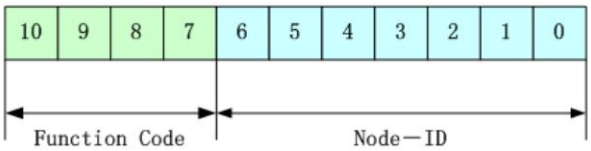

Figure 9－3 Default ID description diagram

Note

Node-ID —— The station number of the servo. The Node-ID ranges from 1 to 127.

Function Code ——Function codes for data transmission, which define the transmission levels of various PDO, SDO, and management packets. The smaller the function codes, the higher the priority.

Table 9－12 CANopen predefined master/slave connection set CAN identifier assignment table

Object	COB-ID
NMT Module Control	000H
SYNC	080H
TIME SSTAMP	100H
Object	COB-ID
Emergency	081H-0FFH
PDO1 (Send)	181H-1FFH
PDO1 (Receive)	201H-27FH
PDO2 (Send)	281H-2FFH
PDO2 (Receive)	301H-37FH
PDO3 (Send)	381H-3FFH
PDO3 (Receive)	401H-47FH
PDO4 (Send)	481H-4FFH
PDO4 (Receive)	501H-57FH
SDO (Send/server)	581H-5FFH
SDO (Receive/customer)	601H-67FH
NMT Error Control	701H-77FH

Note

1、The smaller the COB-ID, the higher the priority.

2.The function code before the COB-ID of each level is in a fixed format.

3.The COB-ID 00H, 80H, 100H, 701H-77FH, and 081H-0FFH are all system management formats.

9.3.3.2 COB-ID

- Send PDO relative to the servo refers to the data sent by the servo, which is received by the PLC. The function code (COB-ID) for sending the PDO is:
  1.0x180+Servo station NO.
  2.0x280+ Servo station NO.
  3.0x380+ Servo station NO.
  4.0x480+ Servo station NO.
- Receiving PDO relative to the servo refers to the data received by the servo, which is sent by the PLC, and the function code (COB-ID) for sending PDO is:
  1.0x200+ Servo station NO.
  2.0x300+ Servo station NO.
  3.0x400+ Servo station NO.
  4.0x500+ Servo station NO.

Note

Since the iWMC series servo drives are designed according to the standard CANopen 2.0A protocol, but also support CANopen 2.0B protocol, which means that if the above eight Pdos are not enough, you can also define a new PDO. For example, 0x43FH is used as the communication PDO of station 1, as long as the controller and the servo are defined in accordance with this.

9.3.3.3 PDO transmission type

- SYNC - Transmission triggered by a synchronization message (transmission type: 0-240)

In this transmission mode, the controller must have the ability to send synchronous messages (periodic messages with a frequency of up to 1KHZ), which the servo sends after receiving the synchronous message.

Aperiodic - pre-triggered transfer by a remote frame, or by an object-specific event specified in the device subprotocol. In this mode, the data in the PDO is sent once every time the servo drive receives a synchronization message.

Periodic - Delivery is triggered after every 1 to 240 SYNC messages. In this mode, the data in the PDO is sent once every time the servo drive receives n synchronization packets.

When CANopen communication is configured in synchronous transmission mode, the driver uploads the mapped data in TPDO only after receiving the synchronization message.

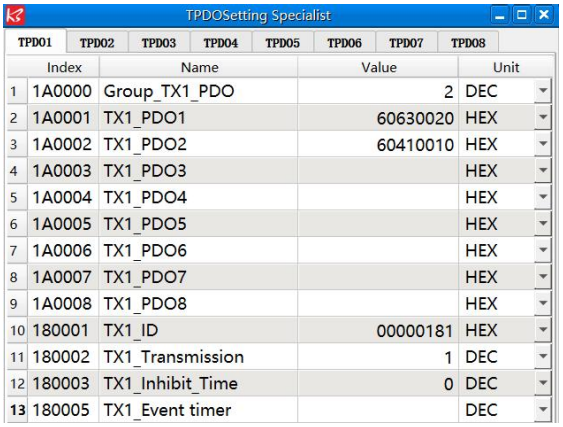

	Index	Name	Value	Unit
1	1A0000	Group_TX1_PDO	2	DEC
2	1A0001	TX1_PDO1	60630020	HEX
3	1A0002	TX1_PDO2	60410010	HEX
4	1A0003	TX1_PDO3		HEX
5	1A0004	TX1_PDO4		HEX
6	1A0005	TX1_PDO5		HEX
7	1A0006	TX1_PDO6		HEX
8	1A0007	TX1_PDO7		HEX
9	1A0008	TX1_PDO8		HEX
10	180001	TX1_ID	00000181	HEX
11	180002	TX1_Transmission	1	DEC
12	180003	TX1_Inhibit_Time	0	DEC
13	180005	TX1_Event timer		DEC

Figure 9－4 TPDO configuration in synchronous mode

Table 9－13 TPDO configuration in synchronous mode

Name	Meaning
TPDO1 Mapping group	2, the number of objects configured in this PDO, TPDO1 is configured with two objects: actual location and status word
Mapping 1-8	Configure the servo-CANOPEN control object
TPDO1 station number	180+ Drive ID (TPDO2 station number should be set to: 280+ drive ID)

TPDO1 Transport type	Synchronous transmission mode: The driver sends TPDO to the controller after receiving synchronization packets
TPDO1 Disable time	It must be set to 0
Note: The sum of the actual position and status word length of the assigned object in TPDO1 is 4+2=6 bytes	

Note

- The sum of the actual position of the object and the length of the status word in TPDO1 is 4+2=6 bytes. The default RPDO transmission mode is 254. You do not need to set the transmission mode. The transmission mode takes effect immediately after data is received.
- The default value of synchronizing packets is

COB-ID	DLC
0x80	0

- Asynchronous (Transfer type: 254/255)

The slave station sends the packet after the change regardless of whether the master station asks for it. In addition, you can define the interval between sending the same packet twice to prevent the packets with higher priorities from occupying the bus all the time (the lower the value of PDO, the higher the priority).

For iWMC servo wheel, it supports all 256 transmission modes, and the user only needs to select the transmission mode of the drive according to the transmission mode supported by the controller.

In asynchronous transfer mode, the mapped object data in PDO is transmitted as soon as it changes.

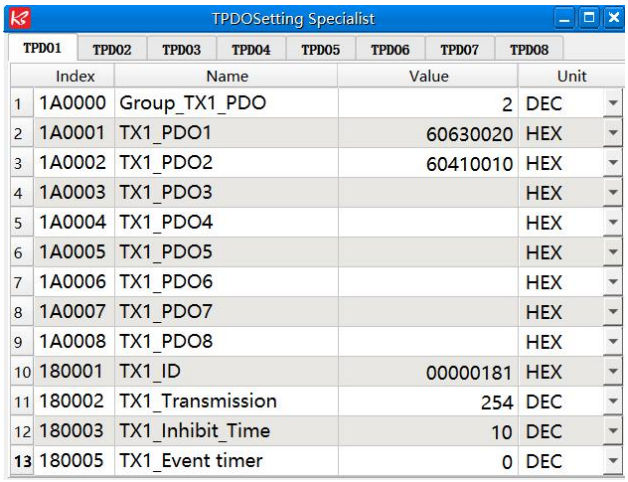

	Index	Name	Value	Unit
1	1A0000	Group_TX1_PDO	2	DEC
2	1A0001	TX1_PDO1	60630020	HEX
3	1A0002	TX1_PDO2	60410010	HEX
4	1A0003	TX1_PDO3		HEX
5	1A0004	TX1_PDO4		HEX
6	1A0005	TX1_PDO5		HEX
7	1A0006	TX1_PDO6		HEX
8	1A0007	TX1_PDO7		HEX
9	1A0008	TX1_PDO8		HEX
10	180001	TX1_ID	00000181	HEX
11	180002	TX1_Transmission	254	DEC
12	180003	TX1_Inhibit_Time	10	DEC
13	180005	TX1_Event timer	0	DEC

Figure 9－5 TPDO configuration in asynchronous transport mode

Table 9－14 TPDO configuration in asynchronous transport mode

Name	Meaning
TPDO1 Mapping group	Indicates the number of objects configured in the PDO. TPDO1 is configured with two objects: actual location and status word
Mapping 1-8	Configure the servo-CANOPEN control object
TPDO1 station number	180+ Drive ID (TPDO2 station number should be set to: 280+ drive ID)
TPDO1 Transport type	254 or 255, asynchronous transmission modev
TPDO1 Disable time	The unit is ms. This parameter prevents the network from being blocked by frequent packets sent by the server. In multi-axis asynchronous transmission mode, set this parameter based on site requirements

Note

- The sum of the actual position of the object and the length of the status word in TPDO1 is 4+2=6 bytes.
- The default RPDO transfer mode is 254. This parameter takes effect immediately after data is received.
- A PDO can specify a forbidden time, that is, define the minimum interval between two consecutive PDO transmissions, to avoid the problem that the data of high priority information always occupies the bus because the amount of data is too large, and other low priority data cannot compete with the bus. The forbidden time is defined by a 16-bit unsigned integer, in 1ms.

- Event time reporting function

In asynchronous transfer mode, in addition to the instantaneous, the event time can be set if the driver needs to periodically upload data to the controller.

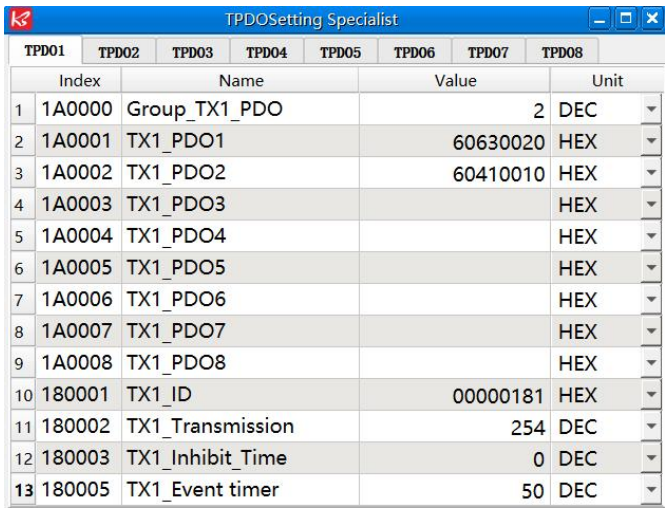

	Index	Name	Value	Unit
1	1A0000	Group_TX1_PDO	2	DEC
2	1A0001	TX1_PDO1	60630020	HEX
3	1A0002	TX1_PDO2	60410010	HEX
4	1A0003	TX1_PDO3		HEX
5	1A0004	TX1_PDO4		HEX
6	1A0005	TX1_PDO5		HEX
7	1A0006	TX1_PDO6		HEX
8	1A0007	TX1_PDO7		HEX
9	1A0008	TX1_PDO8		HEX
10	180001	TX1_ID	00000181	HEX
11	180002	TX1_Transmission	254	DEC
12	180003	TX1_Inhibit_Time	0	DEC
13	180005	TX1_Event timer	50	DEC

Figure 9－6 Event time is used to schedule the upload in asynchronous mode

Table 9－15 Event time is used to schedule the upload in asynchronous mode

Name	Meaning
TPDO1 Mapping group	Represents the number of objects configured in the PDO. TPDO1 is configured with two objects: actual location and status word
Mapping 1-8	Configure the servo-CANOPEN control object
TPDO1 station number	180+ Drive ID (TPDO2 station number should be set to: 280+ drive ID)
TPDO1 Transport type	254 or 255, asynchronous transmission mode
TPDO1 Disable time	When uploading using event time, this object is set to 0
TPDO1 Event time	Cycle time (in ms) for the driver to send PDO to the controller
Note: The sum of the actual position and status word length of the assigned object in TPDO1 is 4+2=6 bytes	

9.3.3.4 Protection Mode/Monitoring Type Description

Monitoring type refers to the check method selected by the master station to check the slave station during operation. Through these two ways, the slave station can be judged whether there is a fault, and the corresponding treatment is made according to these faults!

1. Master heartbeat message

The slave station periodically uploads the message to the master station at the "monitoring time". If the master station does not receive the next heartbeat message from the slave station after the "heartbeat consumer time", the master station determines that the communication is wrong and the master station generates an alarm!

Table 9-16 The format of the heartbeat packet was uploaded from the slave station

COB-ID	Byte 0
0x700+Node_ID	State
Case message (slave ID=1) : 701 05	

2. Slave heartbeat message

The master station periodically sends packets to the slave station according to the "monitor time". If the slave

station does not receive the next heartbeat packet from the master station after the "Heartbeat Producer time", the slave station determines that the communication is wrong! When the communication interrupt mode (0x600700 set) is 1, the driver will alarm and stop when the CAN communication fails.

Table 9-17 The format of heartbeat packets sent by the master station

COB-ID	Byte 0
0x700+master ID	Master station status
Case message (primary ID=127) : 77F 05	

Table 9-18 Status value meaning

State value	Meaning
0x00	boot-up
0x04	Stopped
0x05	Operational
0x7f	Pre-operational

When a Heartbeat node starts, its Boot-up packet is the first Heartbeat packet.

Note

The generation time of heartbeat message and the heartbeat packets of the slave station are configured by the master station when the power is turned on, and they are not saved by default when the power is off.

3. Node protection

The master station periodically sends the remote request packet to the slave station in the monitoring time. The slave station responds immediately after receiving the request packet. If the master station does not receive the response packet from the slave station after the Monitoring time x Life Factor time expires, the master station determines that the slave station is wrong. At the same time, the slave station can also monitor the remote request status of the master station and start communication protection from the first remote frame received. If the remote frame of the master station is not received beyond the time of "Node protection time * node protection factor", the slave station will also judge the communication error. The communication interrupt mode (0x600700) needs to be set to 1, and the drive will alarm and stop when CAN communication fails.

Master request message format—— (0x700+node number) (The message has no data)

Slave response message format—— (0x700+node number) +state

Table 9-19 Slave station reply message

COB-ID	Byte 0
0x700+Node_ID	Bit7: trigger bit Bit6-Bit0: status

Table 9-20 Slave station reply packet status value meaning

State value	Meaning
0	Initializing
1	Disconnnected
2	Connecting
3	Preparing
4	Stopped
5	Operational
127	Pre-operational

Status —— The data section includes a trigger bit (bit7), which must be alternately set to "0" or "1" in each node protection response. The trigger bit is set to 0 for the first node protection request. Bits 0 and 6 (bit0 to 6) indicate the node status. Table 9-20 describes the values.

The standard CAN slave station generally supports only one node protection mode, iWMC support protection mode. However, a node cannot support both node protection and heartbeat message at the same time. Only one of them can be used for protection.

9.3.3.5 Startup process description

CANopen supports both extended boot-up and minimal boot-up procedures during network initialization. The initialization process can be represented by a node state transition diagram, as shown in Figure 9-7.

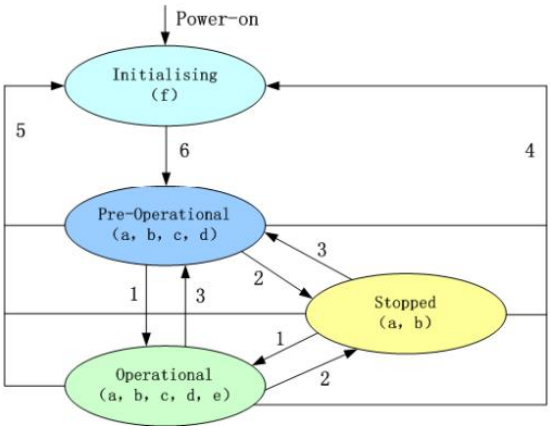

Figure 9-7 Node state transition diagram

Note: The letters in parentheses in the figure indicate communication objects that can be used in different states.

Including： a——NMT d——Emergency b——Node Guard

e——PDO c——SDO f——Boot-up

Switching between modes can be achieved through NMT management messages, only the NMT-Master node can send NMT Module Control messages, all slave devices must support the NMT Module Control service, and NMT Module control messages do not need to be answered. After the initialization is complete, the device automatically enters the Pre_Operational state and sends Boot-up messages. NMT message format is as follows: Nmt-master →NMT Slave(s)

Table 9-21 NMT manages the packet format

COB-ID	Byte0	Byte1
0x000	CS	Node-ID

Node-ID=0 indicates that all NMT slave devices are addressed. CS is the command word. Table 9-22 lists the values of CS.

Table 9-22 CS value table

Command word	NMT service
0x01	Enable remote node
0x02	Close remote node

0x80	Enter the pre-operation state
0x81	Reset node
0x82	Reset communication

9.3.3.6 Emergency message description

When a fatal error occurs inside the device, the application device sends an emergency packet with the highest priority to other devices. An emergency message consists of eight bytes.

Table 9-23 Emergency message format

COB-ID	Byte 0-1	Byte2	Byte4-5	Byte6-7
Emergency message station number 0x101400	Emergency error code 0x603F00	Error register 0x100100	error state 0x260100	error state 0x260200

Table 9-24 Emergency error code 0x603F00

Alarm content	Emergency Error Code (Hex)	Alarm content	Emergency Error Code (Hex)
Communication encoder is not connected	0x7331	Current sensor fault	0x5210
Communication encoder multi-turn error	0x7320	Software watchdog reset	0x6010
Communication encoder check error	0x7330	Abnormal interrupt	0x6011
Driver temperature is too high	0x4210	MCU fault	0x7400
The driver bus voltage is too high	0x3210	Motor model configure error	0x6320
The driver bus voltage is too low	0x3220	Motor power line out of phase	0x6321
Driver power part short circuit or motor short circuit	0x2320	Pre-enable alarm	0x5443
Current sampling saturation	0x2321	Positive limit error	0x5442
Driver brake resistance is abnormal	0x7110	Negative limit error	0x5441
Actual following error exceeds allowable	0x8611	SPI fault	0x6012
Logic low voltage	0x5112	Bus communication error	0x8100
Motor or drive is overloaded	0x2350	Bus communication timeout	0x81FF
Input pulse frequency is too high	0x8A80	Full closed loop check error	0x8A81
Excessive motor temperature	0x4310	Main encoder ABZ error	0x7382
Communication encoder is not responde	0x7331	Main encoder count error	0x7306
EEPROM data error	0x6310		

Table 9-25 Error register

Bit	Error type
0	Common fault
1	Current
2	Voltage
3	Temperature
4	Communication error
5	Device profile specific
6	Encoder
7	Reserve

9.4 CANopen Bus Communication Setting

This chapter will introduce the setting of CAN bus communication parameters. In the upper computer software interface, click **Specialist ->ECAN Configuration -> ECAN Settings** to enter the parameter setting interface. When the master station with the network management function is powered on, the parameters of the slave station are initialized by sending SDO. Generally, parameters such as synchronization ID, node protection time, node protection time coefficient, node protection station number, emergency message station number, and heartbeat message generation time do not need to be set by the user.

Table 9－26 CANopen relate parameter

CANopen address	Name	Meaning	Default
10050020	Synchronization ID	The transmission type ranges from 1 to 240. This parameter is available in synchronous mode but does not need to be set in asynchronous mode.	80
100C0010	Node protection time	Through node protection, the master station can monitor the current status of each node. The master station sends a remote frame (the default COBID is 0x700+ station number and contains no message) to query the status of the slave node according to the node protection period. The slave node needs to respond within a certain time range, otherwise the master node considers the slave node offline and the driver enters the alarm state.	1000
100D0008	Node protection time coefficient		3
100E0020	Node protection ID	700+ drive ID	
10140020	Emergency message station number	80+ drive station number	
10170010	Timestamp of heartbeat message generation	The slave node periodically sends message to the master node. If the master node does not receive the message within a certain period of time, the slave node is considered to be disconnected	
2F810008	CAN baud rate	CAN baud rate Setting 100：1M 50：500k 25：250k 12：125k 5： 50k 1： 10k	50
30110108	ECAN synchronization period	In interpolation mode, this parameter is set based on the synchronization packet interval of the master station. In asynchronous mode, this parameter is not required. 0:1ms 1:2ms 2:4ms 3:8ms	2
30110208	ECAN Synchronous clock mode	Set to 1 in interpolation mode to enable the synchronization clock, and set 0 to turn off the synchronization clock in non-interpolation mode	0
30110410	ECAN synchronization Lost count	In synchronization mode, the communication status is monitored. If the value does not change, the communication status is good. If the value keeps changing, interference occurs or the synchronization period is incorrectly set.	
60070010	Communication interrupt mode	CAN communication interruption mode: determines the action logic that the driver still does not receive the node protection packet after the node protection time x node protection coefficient is exceeded 0: No processing 1: An error is reported	0

- Use the PLC to initialize PDO parameter

For the CANopen master station that can import EDS files, PDO Settings in the server are not required, and PDO information can be directly configured in the master station. After power-on, PLC initialization will send SDO messages to configure the PDO of the server. After the configuration is completed, the master station will send startup messages to start the slave station, and then PDO communication can be carried out. Most PLCS can be used in this way, such as: Schneider PLC, Siemens S7-1200+CM CANOPEN module, Buke F1 and so on.

Note

EDS file download address:http://download.kinco.cn/D_Software/Servo/EDS.zip

9.5 Interpolation mode based on CANopen

The interpolation mode is suitable for single-axis operation control and multi-axis synchronous control. The master station performs the motion contour planning, and the target position is periodically updated in the synchronous mode. In the host computer software interface, click **Specialist ->ECAN Configuration -> ECAN Settings** to enter the interpolation mode parameter setting interface.

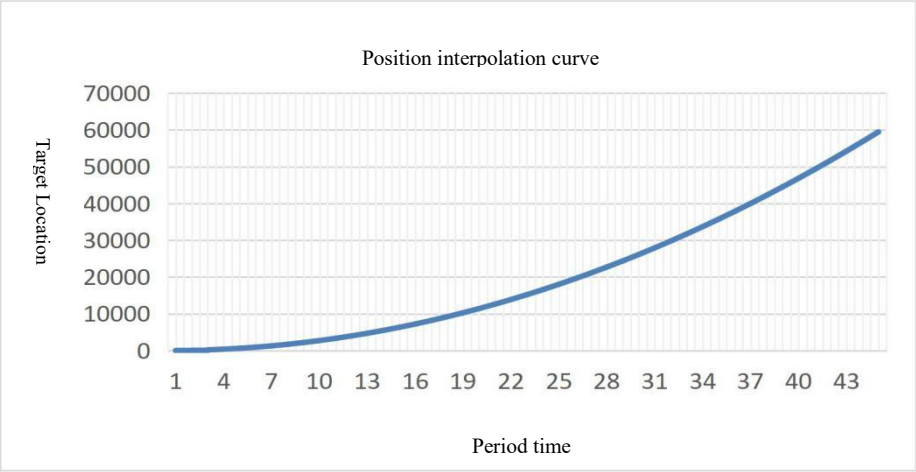

Figure 9-8 Position interpolation curve

Table 9-27 Interpolation control relate parameter

Internal address	Parameter name	Description	Default value
60600008	Operation mode	Set the operation mode to interpolation mode	7
60400010	Controlword	0x1F Enable drive, run interpolation mode 0x06 Loose axis, close drive enable 0x86 Reset drive failure	1F 6 86
607A0020	Target position	target absolute/relative position	User Defined
30110108	ECAN sync period	In interpolation mode, it is set according to the synchronization message cycle of the master station value synchronization period 0 1ms 1 2ms 2 4ms 3 8ms	User Defined

Internal address	Parameter name	Description	Default value
30110208	ECAN Synchronous Clock Mode	Set to 1 in interpolation mode to enable clock synchronization, and set to 0 in non-interpolation mode to disable clock synchronization.	0
30110410	ECAN Sync Loss Count	Monitor the synchronous communication status in interpolation mode, if the value keeps changing, it means that there is communication interference or the synchronization period is inconsistent with the master station setting	/

- CAN communication interruption alarm function

For the communication interruption alarm function, the following parameters need to be set

Table 9－28 Communication interrupt alarm function setting

CANopen 地址	参数名称	含义	默认值
CANopen address	Name	Meaning	Default value
100C0010	Node protection time	Through node protection, the master station can monitor the current status of each node. The master station sends a remote frame (the default COBID is 0x700+ station number and contains no message) to query the status of the slave node according to the node protection period. The slave node needs to respond within a certain time range, otherwise the master node considers the slave node offline and the driver enters the alarm state.	1000
100D0008	Node protection time coefficient		3
100E0020	Node protection ID	700+ drive ID	
10140020	Emergency message station number	80+ drive station number	

Chapter 10 Alarm exclusion

10.1 Mistakes and historical errors

Error: Click "**Driver" -> "Error Display**", or click the button (becomes when an error occurs), the error window will pop up and display the most recent error message. Troubleshoot the fault according to Chapter 10, section 10.2.

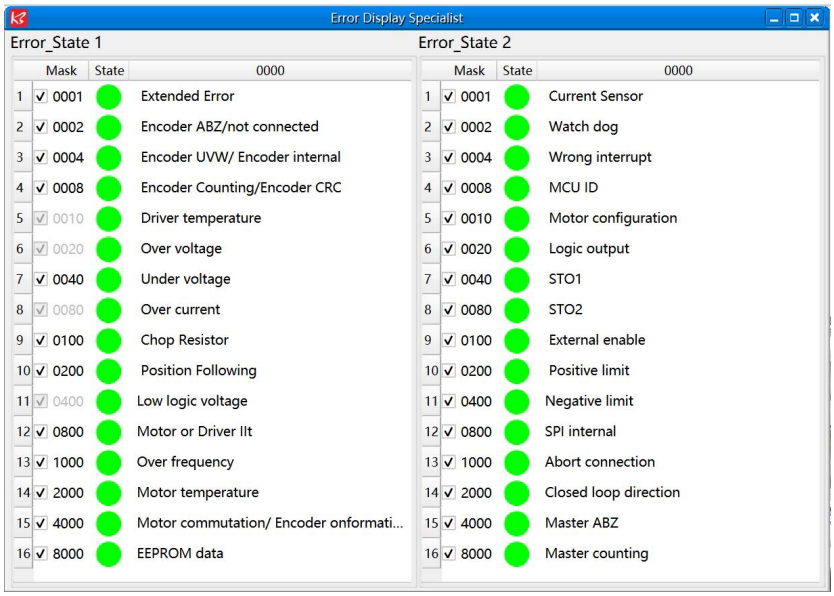

Figure 10-1 Error display interface

Historical error: Click the menu bar "**Driver**" -> "**Error History**", the error history window will pop up, and display the latest 8 error information, including error word, bus voltage, speed, current, temperature, working mode, power tube status. The most recent historical fault is displayed on the first line.

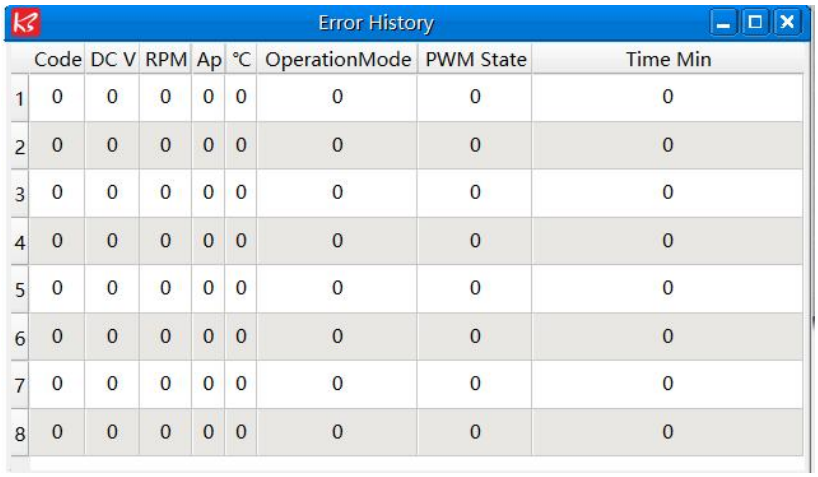

	Code	DC V	RPM	Ap	°C	OperationMode	PWM State	Time Min
1	0	0	0	0	0	0	0	0
2	0	0	0	0	0	0	0	0
3	0	0	0	0	0	0	0	0
4	0	0	0	0	0	0	0	0
5	0	0	0	0	0	0	0	0
6	0	0	0	0	0	0	0	0
7	0	0	0	0	0	0	0	0
8	0	0	0	0	0	0	0	0

Figure 10-2 History error display screen

Table 10-1 Error status （2601.00）information

Bit	Error Name	Error code	Description
0	Extended error		Refer to Error Status 2 definition（2602.00）
1	Encoder communication error	0x7331	Communication encoder not connected
2	Encoder internal fault	0x7320	Encoder internal fault
3	Encoder CRC error	0x7330	Encoder communication is being interfered with
4	Driver temperature	0x4210	Heat sink temperature is too high
5	Overvoltage	0x3210	Bus overvoltage
6	Undervoltage	0x3220	Bus undervoltage
7	Overcurrent	0x2320	Driver power tube or motor short circuit
8	Chop resistor	0x7110	Brake resistance overload
9	Following error	0x8611	The actual following error exceeds the maximum set following error
10	Low logic voltage	0x5112	The logical power supply voltage is too low.
11	Motor or driver IIt	0x2350	The motor or drive power tube IIt is faulty
12	Overfrequency	0x8A80	The pulse input frequency is too high
13	Motor temperature	0x4310	Motor temperature sensor alarm
14	Encoder information error	0x7331	Encoder is not connected or encoder communication times out
15	EEPROM data error	0x6310	EEPROM data verification error

Table 10-2 Error status 2（2602.00）information

Bit	Error Name	Error code	Description
0	Current sensor	0x5210	Current sensor signal offset or ripple too large
1	Watchdog	0x6010	Software watchdog exception
2	Wrong interrupt	0x6011	Invalid interrupt exception
3	MCU ID	0x7400	Wrong MCU type detected
4	Motor configuration	0x6320	No motor data in EEPROM / motor never configured
5~7	Reserved		
8	External enable	0x5443	DIN "pre-enable" function is configured, but the DIN is inactive when the controller is enabled / going to be enabled
9	Positive limit	0x5442	Positive position limit (after homing) – position limit only causes error when Limit_Function (2010.19) is set to 0.
10	Negative limit	0x5441	Negative position limit (after homing) position limit only causes error when Limit_Function(2010.19) is set to 0.
11	SPI internal	0x6012	Internal firmware error in SPI handling
12	CAN abort connection	0x8100	The fault alarm will be generated only when the communication interruption mode (6007.00) is set to 1
13	Closed loop direction	0x8A81	In the full closed-loop working state, the counting direction of the main encoder is opposite to that of the motor encoder
14	Master ABZ	0x7382	Master encoder connection error
15	Master counting	0x7306	The main encoder index signal is abnormal

Remind

There's a mask checkbox beside every error item,all are defaulted to be checked, ☑ means it can be unchecked, ☑ means it can't be unchecked.An unchecked ☐ meanthe related error will be ignored.The error mask can also be set with the object error mask (2605.01) and error mask 2 (2605.04)（see table 10-4）.

Table 10-3 Error extension (2605.07) information

Bit	Error Name	Error code	Description
0	Origin record error	0x5210	Current sensor signal drift or ripple is too large
1	Internal braking resistor overtemperature	0x7111	The actual power of the internal braking resistor is too high
2	Internal braking resistor short circuit	0x7112	Internal braking unit damaged, braking circuit short circuit
3	Motor phase loss	0x6321	A phase in the motor power line UVW is not connected
4	ADC sampling saturation	0x2321	Current sampling ADC reaches limit, current runaway
12	service timeout	0x81FF	Communication Bus Error Extension

Table10-4 Error mask

Internal address	Type	Name	Description	Default
2605.01	Uint16	Error_Mask	Mask of Error_State(2601.00). Bit = 0 means related error will be ignored.	0xFFFF
2605.02	Uint16	Store_Mask_ON	Error mask for Error_History of Error_State(2601.00) when controller is enabled. Bit = 0 means related error won't be stored in the Error_History	0xFBFF
2605.03	Uint16	Store_Mask_OFF	Error mask for Error_History of Error_State(2601.00) when controller is not enabled. Bit = 0 means related error won't be stored in the Error_History	0x0000
2605.04	Uint16	Error_Mask2	Mask of Error_State2(2602.00). bit = 0 means related error will be ignored	0xFFFF
2605.05	Uint16	Store_Mask_ON2	Error mask for Error_History of Error_State2(2602.00) when controller is enabled. Bit = 0 means related error won't be stored in the Error_History	0xF1FF
2605.06	Uint16	Store_Mask_OFF2	Error mask for Error_History of Error_State2(2602.00) when controller is not enabled. Bit = 0 means related error won't be stored in the Error_History	0x003F

10.2 Alarm cause and treatment measures

When the drive alarms, the red ERR light of the drive will be steady on.

If you want to query more detailed error information and error history, please use the RS485 serial port communication cable (or usb debugging cable) to connect the drive to the upper computer to view.

When an alarm occurs, it is necessary to first investigate and identify the cause of the fault. Do not directly perform a forced reset. Our company will not be responsible for any losses caused by a forced reset!

Table 10－5 Error status word 1 alarm code

Alarm code	Alarm information	Reason	Troubleshooting
FFF.F	The motor is not configured or the motor is incorrectly configured	1. The driver is not equipped with a motor. 2. The current motor model is different from the motor model saved by the driver	1. the driver factory parameters do not include motor configuration, connect the motor encoder line can automatically identify the motor parameters. 2. Connect the upper computer software to check whether the current motor model matches the motor code on the nameplate; When the current motor model is different from the actual connected motor, please re-identify the motor parameters.
000.1	Extended Error	Error status word 2 alarm	Look at the error status word 2 and check the meaning of the error against the alarm code.

000.2	Encoder communication failure	Encoder cable error or not connected; The presence of a 400.0 alarm indicates that the communication encoder is not responding	Step 1: Make sure that the encoder between the driver and the motor is properly connected and the cable is firmly connected. Step 2: Check whether the current motor model matches the motor code in the nameplate through the upper computer software.
000.4	Encoder internal fault	Multi-turn absolute encoder multi-turn data is invalid, need to reset	Step 1: Use the host software to modify the communication encoder data reset (0x269000) to 10. Step 2: Reset the faulty or restart the drive. If the error persists, check whether the battery cable is securely connected, and try to replace the battery cable or compare the motor.
000.8	Encoder CRC error	Motor model setting error; Encoder wiring error or external interference caused;	1, Whether the motor configuration is correct Step 1: Check whether the current motor code is consistent with the motor code in the connected motor nameplate through the upper computer software. Step 2: Make sure that the encoder between the driver and the motor is properly connected and the cable is firmly connected. 2, check whether the driver grounding wire is well connected (different from the motor PE wire) 3. Check whether the grounding cable of the entire device is well connected. 4. Use an independent power supply to power the drive.
001.0	Driver overtemperature	The temperature of the drive power module reaches the alarm value	Step 1: Check whether the motor and drive power meet the requirements. Step 2: Restart the drive and check whether the cooling fan can be started during the power-on process. Check that the heat dissipation hole in the driver housing is blocked. Step 3: When the ambient temperature exceeds 40°, take heat dissipation measures or derate the power cabinet. Step 4: Increase the drive installation distance appropriately Step 5: The internal power circuit of the driver is damaged. Replace the driver.
002.0	Overvoltage	The DC bus voltage exceeds the overvoltage alarm point	Step 1: Check whether the power supply voltage is within the driver input voltage range and whether the power supply voltage is stable. Step 2: The energy generated in high-speed braking occasions will be fed back to the driver bus capacitor, and it can be considered to connect a suitable brake resistance to absorb and consume excess energy through the brake resistance. Step 3: If the brake resistance value is too large, the bus energy leakage is not timely, and the brake resistance value should be reduced.
004.0	Undervoltage	The DC bus voltage is lower than the low voltage alarm point	Step 1: Check whether the power supply voltage is within the driver input voltage range and whether the power supply voltage is stable. Step 2: Power on the power supply and then the logic power supply, and ensure that the drive is connected to the power supply before enabling the power supply.
008.0	Overcurrent	Instantaneous current exceeds the overcurrent protection value.	Step 1: Check whether the motor configuration parameters are consistent with the motor drawing. Step 2: Check whether there is a short circuit between the power line UVW, and try to replace the power cable/motor/driver for comparison. Step 3: Interference causes an overcurrent alarm. For details, see 3.4 Setting EMC Conditions.
010.0	Chop Resistor	External brake resistance is overloaded	Step 1: Check whether the external brake resistance value and brake resistance power are set correctly on the upper computer. Step 2: The brake resistor power is insufficient, replace the brake resistor with a higher power.
		Internal brake resistance overtemperature	The power of the brake resistance inside the driver is insufficient. Please disconnect the short cable between DC+/RB1 and RB-end, and connect the appropriate external brake resistance between DC+/RB1 and RB-end.
		Internal brake unit damaged, brake circuit short circuit	After the driver is powered off, use a multimeter to measure the DC- and RB-ends. If the driver works properly, replace the driver.

020.0	Following Error	The actual following error exceeds the set maximum following error value. The possible reasons are: 1. The motor cable is improperly connected 2. The control ring is too rigid 3. The maximum following error is set too small 4.Target speed exceeds maximum speed limit 5. The target torque limit is too small 6. The lock is not opened 7. Mechanical plug/friction	Step 1: Make sure the power cable UVW is connected correctly Step 2: Readjust the gain and increase the rigidity. Refer to Chapter 5 for the rigidity adjustment method Step 3: Readjust the maximum follow error (0x606500) Step 4: Readjust the maximum speed limit (0x607f00) Step 5: Readjust the target current limit (0x607300), the default value of the target current limit is equal to the maximum motor current (0x64100B) Step 6: Measure whether the lock line connection is normal, measure the lock voltage, replace the motor and compare the test Step 7: Remove mechanical jams and apply lubricant
040.0	Low logic voltage	The logic voltage is lower than the lower alarm limit	Check whether the logic voltage is within the driver input voltage range and the power supply voltage is stable
080.0	Motor or drive IIT error	The motor or drive is overloaded for a long time, the possible reasons are: 1. Motor power line and encoder wiring error 2. When the motor shaft is rotating, the lock is not loosened 3. The drive control ring parameters are incorrectly set 4. The mechanical device is stuck or the friction is too large 5. Driver/motor selection error can not meet the application requirements	Step 1: Check that the encoder/power line is properly connected Step 2: Measure whether the brake line connection is normal, measure the lock voltage, replace the motor and compare the test Step 3: Adjust the parameters of the control ring Step 4: Eliminate mechanical jams and apply lubricant Step 5: Run with reduced load or replace with more powerful products
100.0	Over frequency	External input pulse frequency is too high	1 reduce the pulse frequency 2, when using more than 600KHz pulse, need to increase the pulse frequency control 0x250808 value.
200.0	Motor temperature	The motor temperature exceeds the specified value.	User-defined alarm
400.0	Encoder information error	Encoder cable error or not connected; The presence of a 000.2 alarm indicates that the communication encoder is not responding	Step 1: Make sure that the encoder between the driver and the motor is properly connected and the cable is firmly connected. Step 2: Check whether the current motor model matches the motor code in the nameplate through the upper computer software. If the current motor model is different from the actual connected motor, please set the correct motor parameters.
800.0	EEPROM error	Data is damaged when the power is turned on and data is read from the EEPROM.	Step 1: After initializing the control ring parameters, save the control parameters and restart the drive Step 2: Import the cdi file through the host software

Table 10－6 Error status word 2 Alarm code

Alarm code	Alarm information	Reason	Troubleshooting
000.1	Current sensor	Current sensor signal offset or ripple too big	Step 1: The current sensor generates an alarm due to external interference. For details, see 3.4 Setting EMC Conditions. Step 2: Current sensor circuit is damaged, replace the driver and compare.
000.2	Watchdog	Software watchdog exception	After initializing the control ring parameters, save the control parameters and restart the drive.
000.4	Wrong interrupt	Invalid interrupt exception	After initializing the control ring parameters, save the control parameters and restart the drive.
000.8	MCU fault	1. The software program does not match the hardware 2. An MCU error is detected	Step 1: Check the software version in the drive properties and update the correct software Step 2: Replace the drive and compare.
001.0	Motor misconfiguration	1. Motor model cannot be automatically identified EEPROM has no motor data or the motor is not configured correctly 2. The motor line is missing, and a phase of the power line UVW is not connected	Step 1: Connect the host computer software to check whether the current motor model matches the motor code on the nameplate; If the current motor model is different from the actual connected motor, reset the correct motor parameters. Step 2: Make sure the motor power line UVW is connected correctly and reliably Step 3: Replace the power cable or driver comparison test.
010.0	External enable	DIN function “pre_enable” is configured, but the input is inactive when the controller is enabled or should become enabled	User-defined alarm

020.0	Positive limit	Positive position limit (after homing), position limit only causes error when Limit_Function (0x201019) is set to 0.	User-defined alarm
040.0	Negative limit	Negative position limit (after homing), position limit only causes error when Limit_Function (0x201019) is set to 0.	User-defined alarm
080.0	SPI fault	Internal firmware error in SPI handling	Please contact the supplier.
100.0	CAN bus fault	This function is enabled only when the Communication interruption mode (0x600700) is set to 1	User-defined alarm
200.0	Closed loop direction	In full closed loop mode, the counting direction of the main encoder is opposite to that of the motor encoder	Step 1: Check the count direction of the main encoder and the count direction of the motor encoder, the count direction is inconsistent, please change the count direction of the main encoder (0x250A03) Step 2: The master encoder speed is not proportional to the motor encoder speed. Check the mechanical installation, exclude mechanical slippage or jammed, check the full closed spindle check (0x250A05) and full closed slave shaft check (0x250A06) and full closed loop ratio check (0x250A09) Settings.
400.0	The main encoder ABZ fault	Master encoder connection error	Check that the main encoder signal line is connected correctly
800.0	Master counting error	Master encoder index signal is abnormal	Step 1: Correctly fill in the main encoder period (0x250A01) and set it to 0 to disable check. Step 2: Check for interference

Table 10-7 Performance anomalies and solutions

Anomalies	Alarm reason	Solutions
Motor no load operation abnormal sound or vibration	1. Wiring error 2. Improper setting of control loop parameters 3. Improper installation of motor oil seal or motor failure	Use standard power cables, encoder cables, and control cables to ensure that the cables are properly connected and are not loose or damaged. Initialize Control parameters - The storage control parameters restart before trying to run. Hand twist the motor bearing to check whether the motor is abnormal and try to reinstall the motor oil seal.
Incorrect positioning	1. Improper control loop parameters 2. The pulse data in front of the gear is inconsistent with the number of pulses delivered by the controller 3. The electronic gear ratio is set too large 4. Cumulative error of reciprocating motion 5. Mechanical system factors	Adjust drive control ring parameters according to Section 5 Use shielded twisted pair cables for pulse cables. If the cables are long, increase the diameter of the control cables appropriately. The pulse line is as far away from the power cord as possible, and the driver is well grounded to the motor. Resume factory gear ratio operation. The machine is returned to the original where the process permits, and the origin is searched before the accumulated error exceeds the allowable. Check whether the coupling equipment is firmly installed, the pulley or gear is well fastened, the load inertia is too large, and try to reduce the load or replace a more powerful motor.

Appendix I Method of configuring a third-party motor

Name	Parameter	Note
Number of motor poles	Must be filled in	Please refer to the motor drawing
Maximum motor current	Must be filled in	Please refer to the motor drawing
Phase inductance	Must be filled in	The parameter on the motor drawing × 100 gets configuration parameters
Phase resistance	Must be filled in	The parameter on the motor drawing × 100 gets configuration parameters
Reverse electromotive force	Must be filled in	Please refer to the motor drawing
Torque coefficient	Must be filled in	Please refer to the motor drawing
Rotor inertia	Must be filled in	Please refer to the motor drawing
Brake duty cycle	Reference remarks	90%
Brake delay	Reference remarks	150ms
Motor model	Reference remarks	Please refer to the motor drawing
Use the internal motor library	Reference remarks	Set it to either 1 or 2
Feedback type	Reference remarks	Set the corresponding value according to the encoder feedback type. Bit0: UVW cable check Bit2: Communication type wiring check Bit4: ABZ connection check Bit5: Provincial encoder Tonomagawa encoder set to: 04
Feedback accuracy	Reference remarks	Encoder feedback accuracy Incremental: Number of encoder lines x 4 Communication type: the resolution of a single turn is less than 16 bits set to the actual encoder resolution; Single-turn resolution higher than 16 bits is generally set to 65536 to prevent position overflow
Feedback cycle	Reference remarks	Incremental: The number of pulses per turn of the motor Communication type: Define the encoder type, for example, multi-turn 16-bit, single-turn 17-bit, and feedback period set to 0x1617 for the Tama Agawa encoder
Excitation mode	Reference remarks	Mode 0 or mode 10
Excitation current	Reference remarks	Smaller than the rated current, generally 0.75 times the rated current of the motor
Excitation time	Reference remarks	The default value is 2000ms
Motor iit current	Reference remarks	Generally set to rated current
Motor iit time	Reference remarks	Usually 60 s
Motor current loop bandwidth	Reference remarks	The default value is 2000Hz

Note

- After filling in the above forms, enter our upper computer software, find the motor configuration and selection, fill in the information in turn, and finally save the motor parameters, initialize the control ring parameters, and restart the drive.
- Power on and find that the motor does not have any alarm, you can start to try to run other control modes.
- If there is an alarm, check the corresponding drive manual step by step.
- Before trial operation of the motor, limit the target current to prevent excessive output current of the driver.
- If it is found that the motor does not have any alarm and the motor does not turn, first check whether the resolution is set correctly, then check whether the UVW line is connected inversely, sometimes due to the different specifications of various manufacturers, it may be necessary to adjust the UV line, and finally check whether the excitation mode is set correctly.
- The two parameters of phase inductance and phase resistance need to be multiplied by 100 to get the correct configuration value.

Appendix II Commonly used formulas

The selection method of the trolley motor is suitable for the mechanism of the motor + reducer + whee

Formula：T*n=μ*m*g*d/2	
Diameter of wheel d	m
The reduction ratio of the reducer n	1：n
Torque of motor T	Nm, kgm²/s²
Full load capacity m	kg
friction coefficient μ	unitless
gravitational acceleration g	m/s²

The relationship between the number of pulses and mechanical displacement in pulse mode

Formula：N*A/B=s*n*r/P	
Gear ratio molecule A	unitless
Gear score B	unitless
Ball screw lead P	mm
The number of pulses per turn of the motor r	unitless
Reduction ratio 1：n	unitless
Mechanical displacement s	mm
Pulse count N	unitless

The relationship between speed and linear velocity

Formula：n＝v÷r÷π	
Speed n	rpm
linear velocity v	mm/s
Radius r	mm

Parameter Name	Engineering unit	Internal unit	Conversion relation
Speed	rpm	DEC	DEC=[(RPM*512* encoder resolution)/1875]
Acceleration		DEC	DEC=[(RPS/S*65536* encoder resolution)/4000000]
Current	A	DEC	1Arms=[2048/(drive peak current Ipeak/1.414)]dec

For example:

The speed engineering unit is rpm, the internal unit is dec, and the relationship between the two is that 1RPM is equal to 2730dec (encoder resolution 10000)! Assuming that the required speed is 10rpm, then the write speed is 27300dec when using the communication control and 6AA4 in hexadecimal.

The current engineering unit is Arms, the internal unit is dec, 1Arms is equal to about 60dec, if the current needs to be 10Arms, then the current needs to be written to 600 dec when using communication control.