Rated voltage (VDC)	24
Rated power (W)	200
Rated torque (N.m)	0.64
Max torque (N.m)	1.92
Rated speed (rpm)	3000
Max speed (rpm)	4000
Rated current (A)	10
Max current (A)	31
Torque constant (N.m/A)	0.068
Back EMF constant (mV/rpm)	4.1
Inertia(kg*m^2*10^{-4})	0.3
Resistance(Ω)	0.18
Inductance(mH)	0.33
Motor poles	10
Encoder	17 bit
Max radial load (N)	245
Max axial load (N)	74
Protection level	IP65
Mass (kg)	1.4

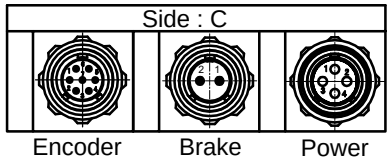

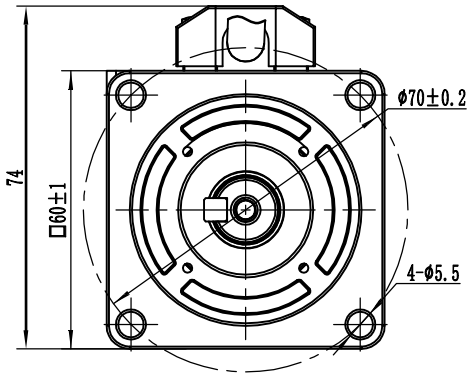

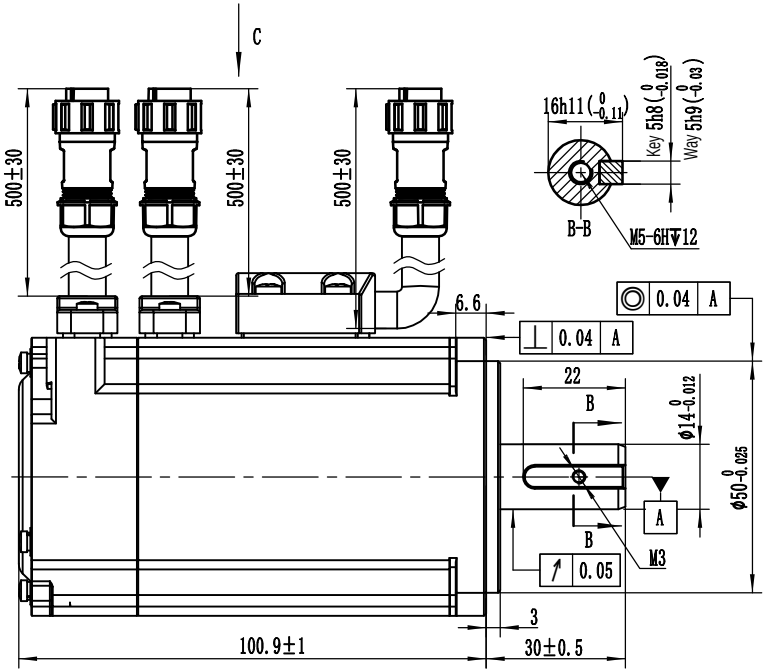

The curve of torque-speed

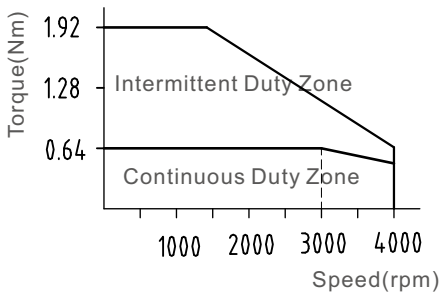

Type	Power connector				Brake Connector	
Pin	1	2	3	4	1	2
Defi	U	V	W	PE	24V+	0V
Color	Red	Blue	Black	Yellow/green	Red	Black

Brake Detail			
Brake mode	Power off brake		
Voltage	24VDC	Power	7.5W
Braking time	⩽40ms	Release time	⩽20ms

Type	Encoder connector						
Pin	1	2	3	4	5	6	7
Defi	GND	5V	0V	SD+	SD-	BAT+	BAT-
Color	PE	White	Black	Blue	Purple	Red	Yellow

Leadshine Technology Co .Ltd

ELVM6020V24EH-M17-HD

200w servo motor with 17 bit absolute encoder
60mm / 24V /with brake