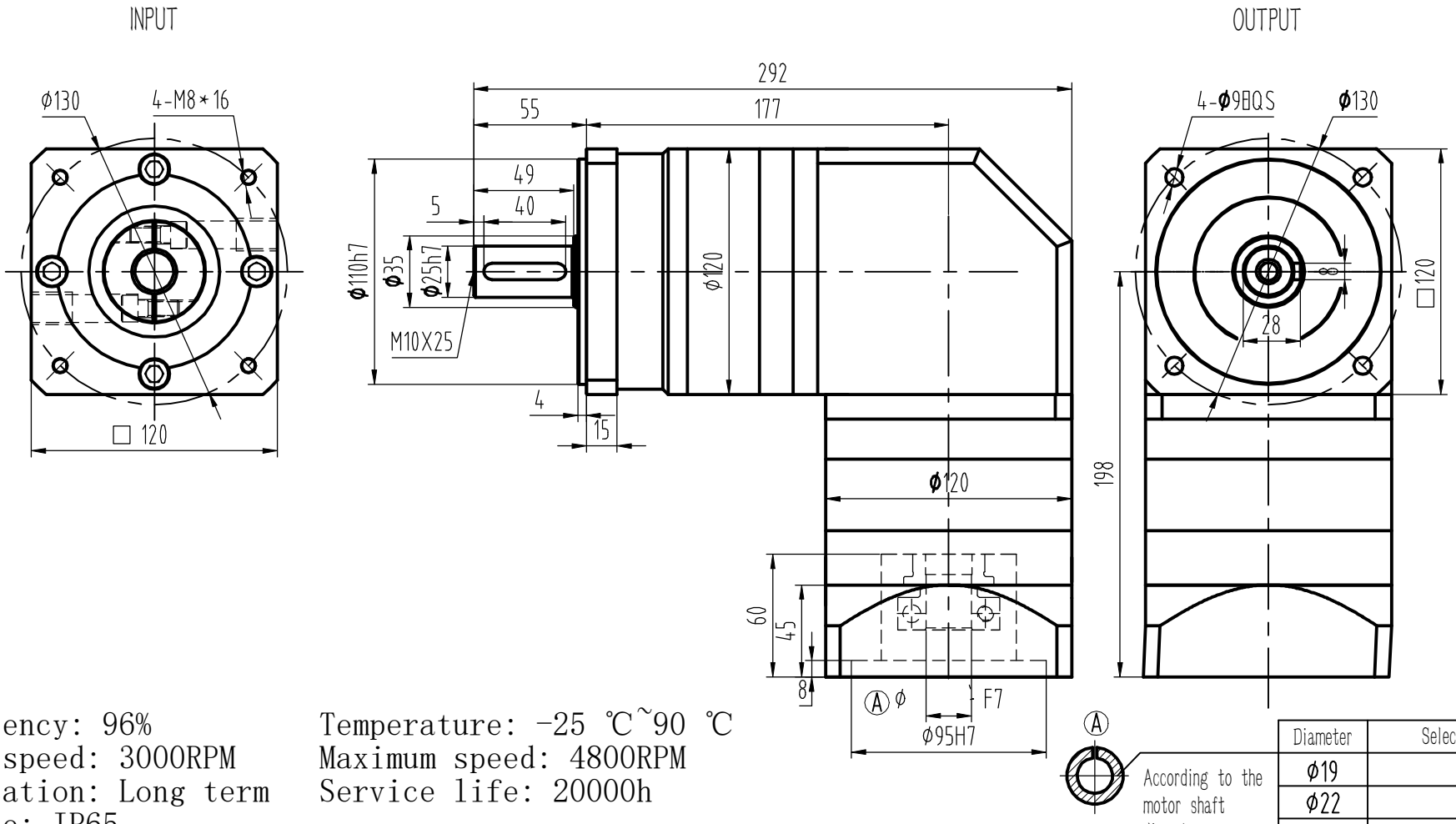

Efficiency: 96%
Rated speed: 3000RPM
Lubrication: Long term
IP code: IP65

Temperature: -25 ℃~90 ℃
Maximum speed: 4800RPM
Service life: 20000h

According to the motor shaft diameter

Diameter	Select (✓)
Φ19	
Φ22	
Φ24	
	i=

ZAE120-L2- | |-25-003-FT-| |-XJG

x55/Φ95x4/4-Φ9-Φ130

Ratio	12	15	16	20	25	28	35	40	50	70
Rate torque NM	250	250	250	250	264	250	264	250	264	177
Max.torque NM	2 time rate toruqe									
Inertia Kgcm	1.56	1.56	1.22	1.15	1.15	1.13	1.13	1.11	1.11	1.11
Radial load N	2230									
Axial load N	1550									

ZAE120-L2-| |-S2-P2

SOPROLEC